TI Space Products

QMLV Radiation-Hardened and Radiation-Tolerant Products to help innovate your space designs

Texas Instruments

MIL-PRF-38535 QML
Class V Qualified

Radiation Hardness
Assured per MIL-STD-883
Method 1019

Single Event Effects
Characterized

www.ti.com/space

2021

Space Products Guide
Overview/Table of Contents

TI Space Products

Texas Instruments offers the most comprehensive selection of leading-edge radiation hardness assured (RHA) and QMLV products for space flight. With a proven legacy of 60+ years in the space market and supporting countless space programs both domestically and internationally, TI is a trusted partner. We focus on radiation performance and best-in-class SWaP (Size, Weight, and Power) to enable leading-edge designs. The breadth of TI's space portfolio provides a full signal-chain solution. The portfolio includes the smallest RHA point-of-load power solutions, fast discrete SerDes and some of the world's highest performance data converters.

TI's Space products include MIL-PRF-38535 QML Class V and RHA components. These devices are typically supported with Total Ionizing Dose (TID) and Single Event Effects (SEE) test reports to address potential product degradation in a space environment. The test results for these devices are available in the product folder under the Technical documents tab.

Satellite Applications

- Communications payload
- Laser communications payload
- Radar imaging payload
- Optical imaging payload
- Navigation payload
- Scientific exploration payload
- Command & data handling (C&DH)
- Attitude & orbit control system (AOCS)
- Satellite electrical power system (EPS)
- Satellite mechanisms
- Launchers, landers and rovers

TI Space Products Portfolio

TI offers RHA and radiation-tolerant, hermetically packaged components highlighted in each of the red blocks to the right. TI also offers many of these space grade products in die form (known good die or tested die).

Space products and applications, see **www.ti.com/space**

Latest version of this Space Products Guide, see **www.ti.com/spaceguide**

Radiation-tolerant portfolio, visit **ti.com/SpaceEP**

Radiation effects eBook, see **ti.com/RadBook**

Table of contents

Space Products Overview 2

Featured Products
Radiation-Hardened Power Management 3
Radiation-Hardened Interface 6
Radiation-Hardened Data Converters 7
Radiation-Hardened Amplifiers 10
Radiation-Hardened Clock and Timing 12
Radiation-Hardened MCU 13
Radiation-Hardened Sensor Products 13

Space-Grade Parts List
Amplifiers + Comparators 14
Data Converters 16
Clock + Timing 17
Interface 18
Sensing 19
Motor Control 19
Power Management 20
Embedded Processing + Memory 22
Logic 23

Space Enhanced Plastic (Space EP) Radiation Tolerant Portfolio Overview 25

Space EP Parts List 26

TI Worldwide Technical Support 27

3–7 VIN, 18 A, Current Mode Monolithic QMLV POL DC-DC Converter
TPS7H4001-SP

Key Features
- 0.6 V ±1.5% VREF accuracy over load, line, temp and TID
- Integrated high-side and low-side power MOSFETs
- Programmable frequency from 100–1000 kHz
- Parallel support for 2–4 devices with 180° or 90° Φ shifted SYNC1 and SYNC2 pins (50-kHz master/slave operation)
- Configurable softstart/tracking, external compensation, power good, enable
- Configurable slope compensation
- Thermally enhanced 34 pins CDFP, 7.62 × 21.59 mm

Radiation Performance
- TID = 100-krad(Si) RHA
- SET/SEFI charac-terized and SEL/SEB/SEGR immune up to 75 MeV.cm^2/mg

Applications
- Space satellite power management and distribution
- Radiation-hardened and tolerant power-tree applications

Benefits
- Higher output current in smaller footprint for powering high-current FPGA and ASIC core voltage rails
- Ease of implementing sequencing schemes
- Easily paralleled for even higher currents with no external components and no external clock needed

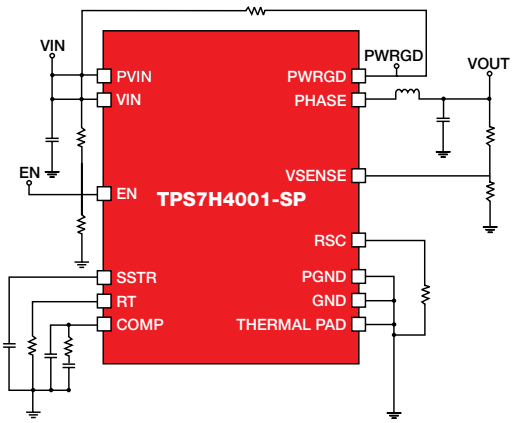

More information at **www.ti.com/product/TPS7H4001-SP**

1.5–7 VIN, 6 A, 35 mΩ On-Resistance Load Switch with Reverse Current Protection and Current Limiting
TPS7H2201-SP

Key Features
- VIN = 1.5 to 7 V, 6-A maximum current
- On Resistance (RON) of 35 mΩ max at VIN = 5 V at 25°C
- Reverse current protection
- Configurable rise time
- Programmable current limiting and fault timers
- OVP and UVLO
- Low control input threshold enables use of 1.8-, 2.5- and 3.3-V logic
- Thermally enhanced 16-pin CDFP, 9.88 × 11.26 mm

Radiation Performance
- TID = 100 krad(Si) RHA
- SEL, SEB and SEGR immune to LET = 75 MeV-cm^2/mg

Applications
- Satellite power management and distribution
- Radiation-hardened and tolerant power-tree applications

Benefits
- RHA qualified and orderable as SMD: 5962R1722001VXC
- Highly integrated solution eliminating the need for discrete FETs for power management
- Controlled inrush current during system power-up
- Reverse current protection for cold-sparing applications
- Able to parallel for current sharing and reduced RON
- Low threshold enable compatible with multiple IO standards
- Over-current system protection with programmable fault timer

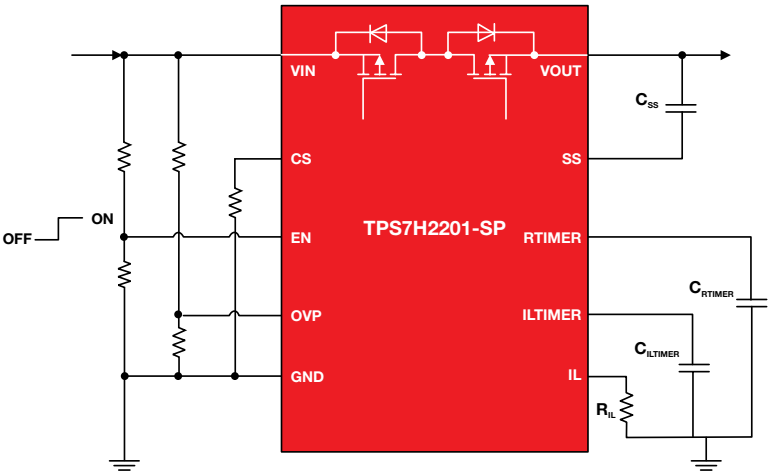

More information at **www.ti.com/product/TPS7H2201-SP**

Radiation-Hardened Power Management

Featured Products

3-A, Sink/Source DDR Termination Regulator with Built-In VTTREF Buffer

TPS7H3301-SP

Key Features

- Control input voltage: 2.5 and 3.3 V
- VLDO input down to 0.9 V
- Enable input and power good output
- 10-mA buffered VTTREF
- Source/sink VTT voltage output with droop compensation
- Thermally enhanced 16-pin CFP (HKR) package

Radiation Performance

- TID = 100 krad(Si) RHA
- SEL, SEB and SEGR immune to LET = 65 MeV-cm^2/mg
- SET immune up to LET = 52.5 MeV-cm^2/mg while supporting JEDEC DDR specifications

Applications

- Space payload processing and data storage
- DDR, DDR2, DDR3, LPDDR3 and DDR4 VTT memory termination and VREF buffer

Benefits

- RHA qualified and orderable as SMD: 5962R1422801VXC
- Meets DDR, DDR2, DDR3, LPDDR3 and DDR4 JEDEC specifications
- Smaller size than competing discrete solutions enabling very small form factor designs
- Outstanding SEE performance, VTT-VTTREF < ±5 mV (JESD8-9B standard is VTT-VTTREF < ±40 mV)
- Very low $R_{\theta JC}$ = 0.6°C/W

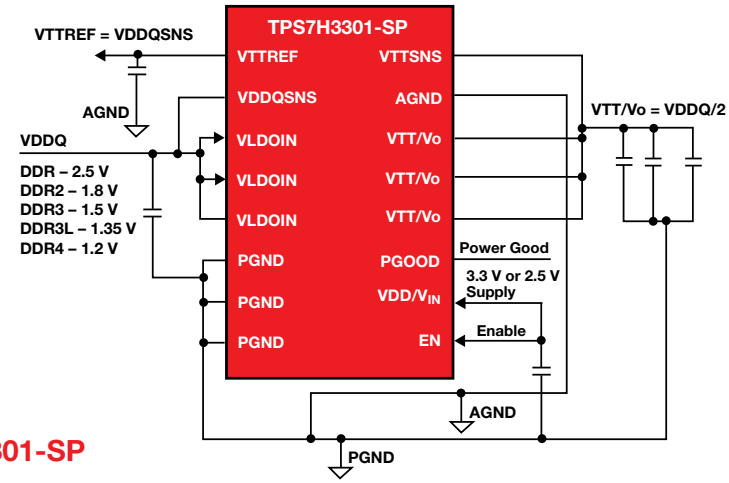

More information at **www.ti.com/product/TPS7H3301-SP**

3- to 7-V_{IN}, 6-A, Monolithic Point-of-Load DC/DC Converter

TPS50601A-SP

Key Features

- PVIN = VIN = 3.0 V to 7 V
- 6-A maximum output current
- Min output voltage to 0.8 V
- Integrated 58-mΩ high-side and 50-mΩ low-side power FETs
- Adjustable frequency from 100 kHz to 1.0 MHz
- Parallel operation 180° out of phase with Sync pin
- Integrated tracking function
- $R_{\theta JC}$ = 0.6°C/W
- Packaged in thermally enhanced 20-pin ceramic flatpack (HKH) and known good die (KGD)

Radiation Performance

- TID = 100 krad(Si) RHA
- SEL, SEB and SEGR immune to LET = 75 MeV-cm^2/mg
- SET/SEFI onset 65 MeV-cm^2/mg

Applications

- Satellite point-of-load (POL) power supplies

Benefits

- RHA qualified and orderable as SMD: 5962R1022102VSC (RHA) 5962R1022102V9A (KGD)
- 96.6% peak efficiency (VOUT = 3.3 V) and low VOUT optmized
- Excellent for driving 12-A current through current share
- Ease of implementing power sequencing schemes
- Best-in-class thermal performance
- WEBENCH® and PSpice models available

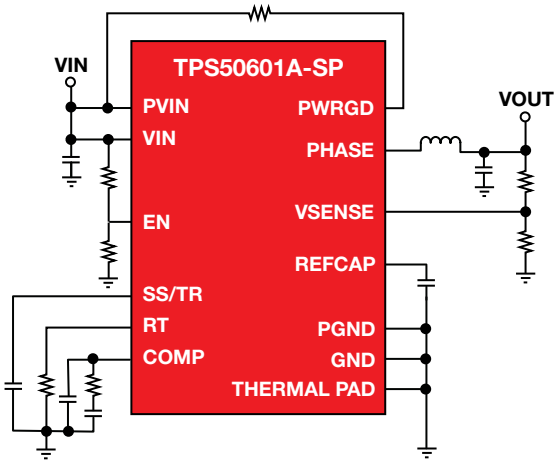

More information at **www.ti.com/product/TPS50601A-SP**

Radiation-Hardened Power Management

Featured Products

1.5- to 7-V_{IN}, 3-A Low-Drop-Out Regulator

TPS7H1101A-SP

Key Features

- V_{IN} = 1.5 V to 7 V
- Ultra-low dropout, PMOS pass device
  - 62 mV (typ) @ 1 A, 335 mV (Max) at 3 A
- Very-high accuracy = ±2%
  - Internal VREF = ±1.8%
- Ultra-low noise: 20.33 µVRMS
- PSRR: >45 dB at 1 kHz
- Programmable softstart and OCP (with current reading)
- Enable across all input voltages and Power Good output (for sequencing)
- Temperature range: –55°C to 125°C
- Packaged in thermally enhanced 16-pin ceramic flatpack

Radiation Performance

- TID = 100 krad(Si) RHA
- SEL immune to LET = 85 MeV-cm^2/mg
- SET onset 52 MeV-cm^2/mg

Applications

- Power management – LDO
- RF components VCOs, receiver, ADC's amplifiers
- High PSRR and low noise for clean analog-supply requirement applications

Benefits

- RHA Qualified: 5962R1320202VXC
- ELDRS Free
- High power savings with lowest V_{IN} on the market for LDO

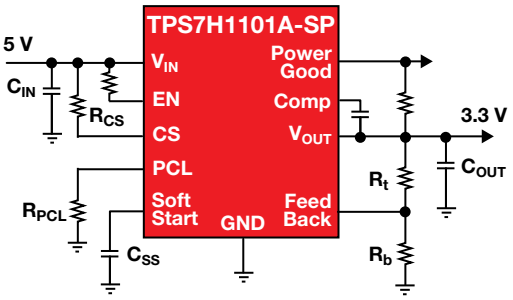

More information at **www.ti.com/product/TPS7H1101A-SP**

Wide V_{IN} (2.3 to 20 V), 1.5-A Low-Drop-Out Regulator

TPS7A4501-SP

Key Features

- V_{IN} = 2.3 V to 20 V
- Adjustable output from 1.21 V to 20 V
- Optimized for fast transient response
- Low noise: 35 µVRMS (10 Hz to 100 kHz)
- High ripple rejection: 68 dB at 1 kHz
- No protection diodes needed
- Less than 1-µA quiescent current in shutdown
- Reverse battery and reverse current protection
- Thermally enhanced 10-pin CFP (HKU) package

Radiation Performance

- Total Dose (TID) = 100 krad(Si) RHA
- SEL immune to LET = 85 MeV-cm^2/mg
- SET immune to LET = 75 MeV-cm^2/mg for VOUT < 5%

Applications

- Power management — LDO
- Satellite point-of-load (POL) power supplies
- Satellite bus and payload

Benefits

- RHA qualified and orderable as SMD: 5962R1222403VXC
- Outstanding low-noise performance
- Widest input voltage range for a RHA LDO

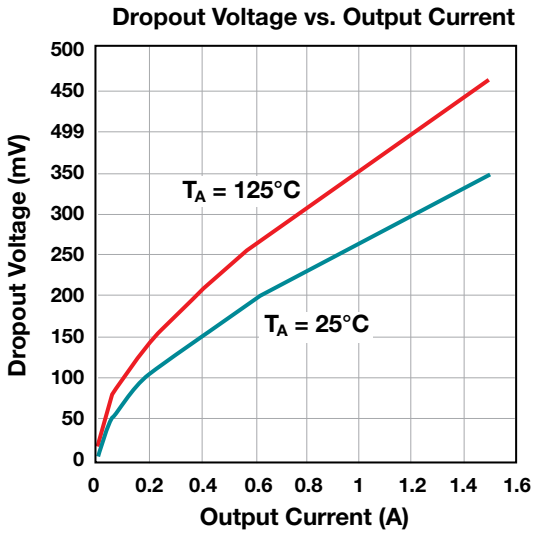

More information at **www.ti.com/product/TPS7A4501-SP**

3.3-V CAN Transceiver
SN55HVD233-SP

Key Features
- Compatible with ISO 11898-2
- Data rates up to 1 Mbps
- Extended –7-V to 12-V common mode range
- High input impedance allows for 120 nodes
- LVTTL I/Os are 5-V tolerant
- Unpowered node does not disturb the bus
- Temperature range: –55°C to 125°C
- Available in 8-pin 6.48 × 6.48-mm ceramic flat pack (HKX)
- Bus pins ESD protection exceeds ±16 kV HBM

Radiation Performance
- TID = 50 krad(Si) RHA
- SEL immune to LET = 86 MeV-cm^2/mg

Applications
- Spacecraft backplane data bus communication and control
- Telemetry/Sensor data transmission
- CAN bus standards such as CANopen, DeviceNet, CAN Kingdom, ISO 11783, NMEA 2000, SAE J1939

Benefits
- RHA qualified and orderable as SMD: 5962L1420901VXC
- Thermal shutdown protection
- Adjustable driver transition times for improved signal quality

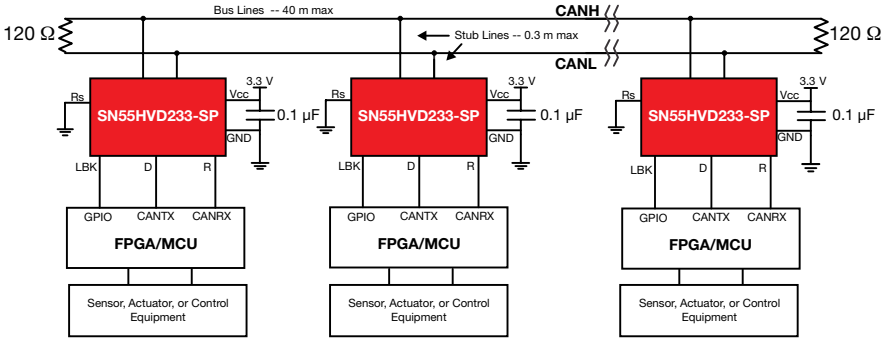

More information at **www.ti.com/product/SN55HVD233-SP**

RS-485 Differential Bus Transceiver
DS16F95QML-SP

Key Features
- Designed for multipoint transmission
- Wide positive and negative input/output bus voltage ranges
- Thermal shutdown protection
- Driver positive and negative current-limiting
- High-impedance receiver input
- Receiver input hysteresis of 50 mV typical
- Operates from single 5.0 V supply
- Available in 10-pin ceramic flatpack

Radiation Performance
- TID = 300 krad(Si) RHA

Applications
- Satellite communication
- Defense electronics
- Radar and guidance systems

Benefits
- Orderable as SMD RHA: 5962F8961501VHA
- Meets EIA-485 and EIA-422A specifications
- Meets SCSI-1 (5 MHz) specifications
- RHA and QMLV qualified

Other Drivers/Receivers in RS-485 Family (Tx, Rx, 3.3 V, 5 V)
- DS96F174MQML-SP Quad high-speed differential driver
- DS96F175MQML-SP Quad high-speed differential receiver

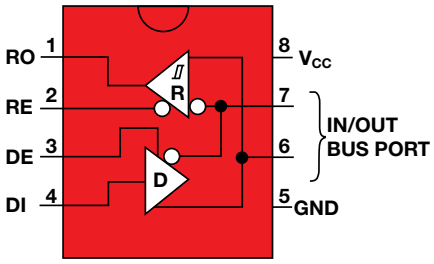

More information at **www.ti.com/product/DS16F95QML-SP**

Radiation-Hardened Interface
Featured Products

Radiation-Hardness-Assured (RHA), Gigabit (10/100/1000) Ethernet PHY with SEFI Monitor
DP83561-SP

Key Features
- TID: 100 krad (Si), QMLV-RHA qualified
- SEL immune > 78 MeV-cm^2/mg at max temp and voltage ratings
- SEU: No link drops and low packet loss up to 48 MeV-cm^2/mg
- SEFI Support Suite:
  - Configuration registers protection: ECC corrects SEFI related bit changes
  - PHY state machine monitor: Looks for invalid changes
  - Supply current monitor: Indicates general PHY health to system
  - Interrupt indication for monitors
  - PLL lock monitor
- Operating temperature range: –55 to 125°C
- MAC I/Fs: RGMII, MII
- IEEE 1000Base-T, 100Base-TX, 10Base-Te
- 64-pin CFP (11 mm x 11 mm)

Radiation Performance
- TID = 100 krad(Si) RHA
- SEL immune to LET = 78 MeV-cm2/mg

More information at **www.ti.com/product/DP83561-SP**

Applications
- Space/Satellite communications

Benefits
- **EMDIO Register Monitor:** Changes in PHY configuration registers will be indicated to system for action/correction
- **PHY PCS State Machine Monitor:** Invalid state changes may be indicative of SEFI, system is notified to adjust accordingly
- **Supply Current Monitor:** SEFI events may cause PHY failure modes undetectable by other method
- **PLL Lock Monitor:** Loss of lock indication can be used to stop data transfer

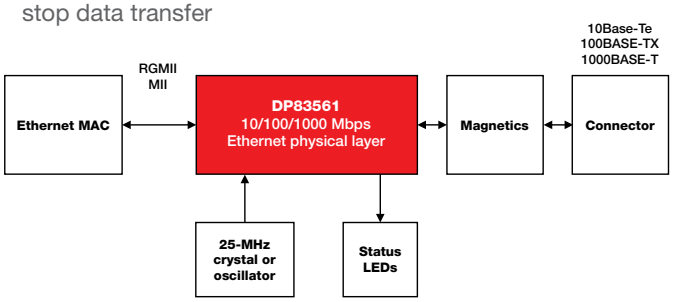

Radiation-Hardened Data Converters
Featured Products

Octal, 128-kSPS, Simultaneous Sampling 24-Bit Delta-Sigma ADC
ADS1278-SP

Key Features
- Simultaneous sampling of 8 inputs via independent 24-bit Delta-Sigma ADCs capable of converting up to 128 kSPS
- Bandwidth: 70 kHz
- Signal-to-Noise Ratio (SNR): 111dB
- Total Harmonic Distortion (THD): –96 dB (Max.)
- Operating temperature –55 to 125°C
- 84-lead ceramic HFQ 10 mm × 10 mm

Radiation Performance
- TID = 75 krad, 50 krad(Si) RHA
- SEL immune to LET = 69 MeV-cm^2/mg (125°C)
- Follows RHA flow without SMD number

Applications
- Orbital observation systems
  - Satellite, shuttles, space stations, launchers
- Satellite sensing
- Space scientific instrumentation

More information at **www.ti.com/product/ADS1278-SP**

Benefits
- Offers easy implementation of simultaneous analog-to-digital conversion for multiple inputs sourced from a wide range of transducers without the need of using an external multiplexer
- Allows accurate measurement of AC signals in the presence of noise; its highly linear transfer function provides high-fidelity and undistorted conversions
- Allows user to better resolve low-level signals found especially in the fields of satellite sensors

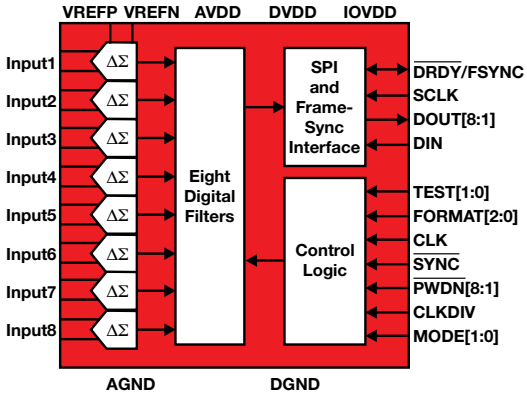

Radiation-Hardened Data Converters

Featured Products

High-Resolution Delta-Sigma ADC

ADS1282-SP

Key Features

- Very high resolution:
  - 130-dB SNR (250 SPS, G = 1)
  - 125-dB SNR (250 SPS, G = 16)
- Ultra linear
  - THD = –122 dB, INL = 0.5 ppm
- Two-channel input MUX
- Low power consumption: 25 mW (high-res); 10 µW (standby)
- Flexible digital filter (sync, FIR or IIR)
- Packaged in thermally enhanced CFP package

Radiation Performance

- TID = 50 krad(Si) RHA
- SEL immune to 50 MeV-cm^2/mg @ 125°C
- SEL immune to 60 MeV-cm^2/mg @ 85°C

Applications

- Orbital observation systems (e.g., satellite, shuttles, space stations, launchers)
- Satellite sensing
- Space scientific instrumentation

Benefits

- RHA qualified and orderable as SMD: 5962L1423101VXC
- Allows user to acquire wide dynamic-range signals in satellite-telemetry sensors
- Minimal distortion to convert signals for frequency-domain analysis and post processing
- Selectable digital filter assures a flexible design that will meet the requirements of the most demanding applications

ADS1282: MUX + PGA + Modulator + Digital Filter

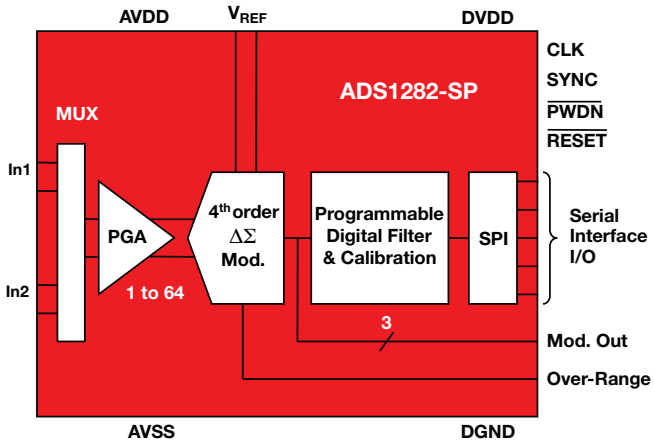

More information at **www.ti.com/product/ADS1282-SP**

Dual-Channel, 14-Bit, 40-MSPS Analog Front End (AFE)

LM98640QML-SP

Key Features

- Fully integrated signal-processing solution for imaging systems
- Correlated double sampling (CDS) or sample/hold (S/H) processing for CCD or CIS sensors
- Serialized LVDS outputs
- Dual lane at 16× sample rate or quad lane at 8× sample rate
- Programmable sampling edge up to 1/64th pixel period
- Programmable analog gain for each channel
- Programmable analog offset correction

Radiation Performance

- TID = 100 krad(Si) RHA
- SEL and SEFI immune to LET > 120 MeV-cm^2/mg

Applications

- CCD arrays
- CMOS image sensors
- Earth observation
- Star tracker

Benefits

- RHA qualified and orderable as SMD: 5962R1820301VXC
- Enables digitization on the focal plane
  - No cabling
  - Reduced weight
- Low power consumption
- Meets space reliability requirements
- TID and SEU characterization data available for faster design in

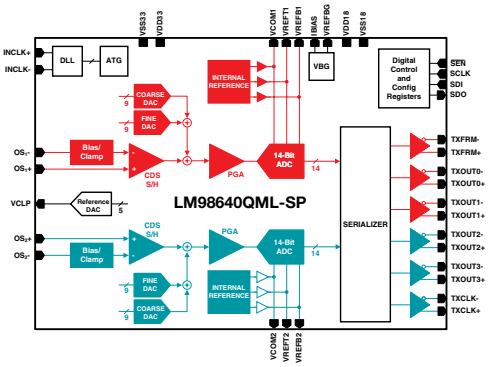

More information at **www.ti.com/product/LM98640QML-SP**

Radiation-Hardened Data Converters

Featured Products

12-Bit, Dual 3.2-GSPS or Single 6.4-GSPS, RF-Sampling Analog-to-Digital Converter (ADC)

ADC12DJ3200QML-SP

Key Features

- JESD204B interface: Up to 12.8 Gbps and 16 lanes
- Digital down-converters: 2×–16× decimation
- Analog input bandwidth (–3 dB): 7 GHz
- Full-scale input voltage: 0.8 VPP
- Noise floor: –152.4 dBFS/Hz
- Noiseless aperture delay adjustment: 19-fs step size
- Easy-to-use synchronization features: SYSREF and timestamp
- Small LGA package: 15 mm × 15 mm
- Power consumption: 3.0 W

Radiation Performance

- TID: 300 krad(Si) RHA
- SEL immune to LET = 120 MeV-cm^2/mg
- Single Event Upset (SEU) immune registers

Applications

- Wideband satellite communications
- RADAR/LIDAR
- Software-defined radio

Benefits

- The ADC12DJ3200QML provides direct RF-sampling up to at least 7 GHz and beyond
- All of the dual 3.2-GSPS or single 6.4-GSPS 12-bit data can be offloaded over 8 lanes of 12.8-Gbps JESD204B SERDES
- The data rate can be decimated and the signal down-converted on-chip using the optional DDC (digital down-converters)

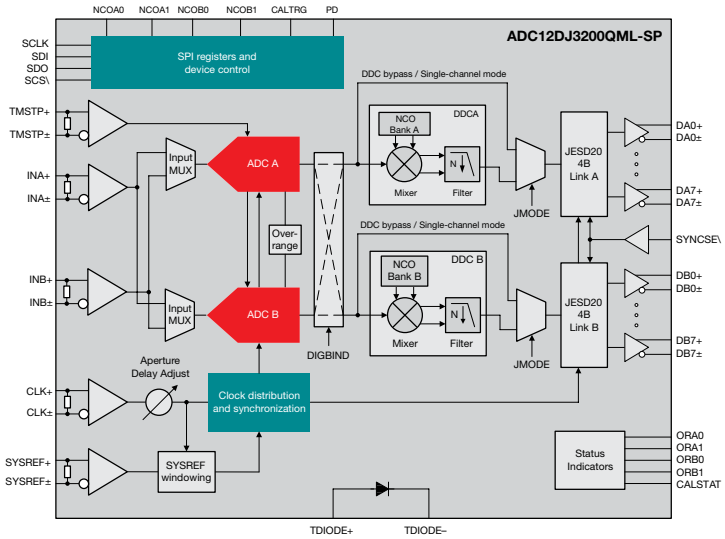

More information at **www.ti.com/product/ADC12DJ3200QML-SP**

8-Channel, 12-Bit, 50-kSPS to 1-MSPS ADC

ADC128S102QML-SP

Key Features

- Eight input channels
- V_A: 2.7 V to 5.25 V
- V_D: 2.7 V to V_A
- Only 2.3 mW of power at 3 V
- Power down 0.06 µW
- DNL: –0.5 to +0.9 LSB typical
- INL: ±0.9 LSB typical
- SPI digital output
- ADC addressing through CS decoder
- SPI/QSPI/MICROWIRE/DSP compatible
- Available in 16-pin ceramic SOIC, CFP and die

Radiation Performance

- TID = 100 krad(Si) RHA
- SEL and SEFI immune to LET > 120 MeV-cm^2/mg

Applications

- Sensors
- Thermistors
- Motor control

Benefits

- Orderable as SMD: 5962R0722701VZA, 5962R0722701VFA and KGD 5962R0722701V9A
- Eight sensors can be monitored with one ADC
- All ADC serialized data shares the same input bus to onboard FPGA/ASIC
- Ultra-low power consumption
- RHA qualified for space applications
- TID and SEU characterization data available for faster design in

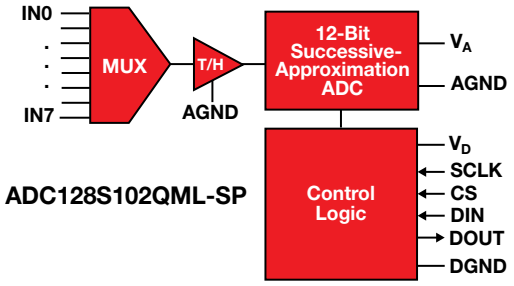

More information at **www.ti.com/product/ADC128S102QML-SP**

Radiation-Hardened Data Converters
Featured Products

12-Bit Micro-Power DAC with Rail-to-Rail Output
DAC121S101QML-SP

Key Features
- Supply range: +2.7 V to +5.5 V
- Only 0.64 mW of power
- Power down < 1 µW
- Rail-to-rail voltage output
- Power-on reset to zero volts output
- SYNC interrupt facility
- DNL: +0.25/-0.15 LSB
- Full-scale step settling time
- Available in a 10-pin ceramic SOIC

Radiation Performance
- TID = 100 krad(Si) RHA
- SEL and SEFI immune > 120 MeV-cm^2/mg

Applications
- Sensors
- Thermistors
- Motor control

Benefits
- Orderable as SMD: 5962R0722601VZA
- Wide operating range
- Ultra-low power consumption
- RHA and QMLV qualified

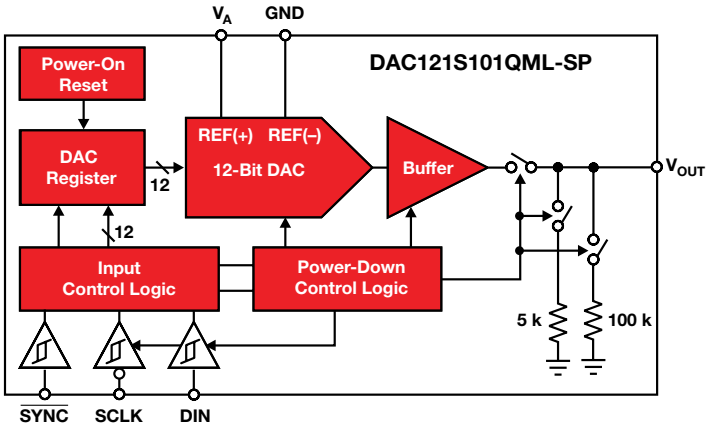

More information at **www.ti.com/product/DAC121S101QML-SP**

Radiation-Hardened Amplifiers
Featured Products

6.5-GHz, Low-Noise, Low-Power, Gain-Configurable Fully Differential Amplifier
LMH5401-SP

Key Features
- Gain bandwidth (GBW) of ~6 GHz
- 17,500 V/µs slew rate
- Gain >3 dB (externally set)
- Low harmonic distortion (SE-DE, 200Ω, G = 17 dB)
  - –80/–80 dBc HD2/3 @ 500 MHz, 1 Vpp
- Low intermodulation distortion (SE-DE, 200Ω, G = 17 dB)
  - –88 dBc IMD3 @ 500 MHz, 1 Vpp
- Output: 5.8 Vpp on 5-V supply
- Supply operation from 3.3 to 5.0 V @ 55 mA
- Power down
- Package: Flipchip Ceramic Leadless Chip Carrier, 5.5 mm × 6.0 mm

Radiation Performance
- TID = 100 krad(Si) RHA
- SEL immune to LET = 85 MeV-cm^2/mg at 125°C

Applications
- Balun replacement DC to 2 GHz
- GSPS ADC drivers
- Baseband, IF and RF gain blocks

Benefits
- RHA orderable as SMD: 5962R1721401VXC
- Unprecedented usable bandwidth and application flexibility DC to 2 GHz
- Excellent linearity performance through 1 GHz
- Supports DC coupled operation, with either single or split supply operation
- Easy single-ended in to differential out conversion without external baluns
- Low power (280 mW on 5-V supply) makes it attractive for a variety of wide-band, high-dynamic-range applications where power and board space savings are desirable

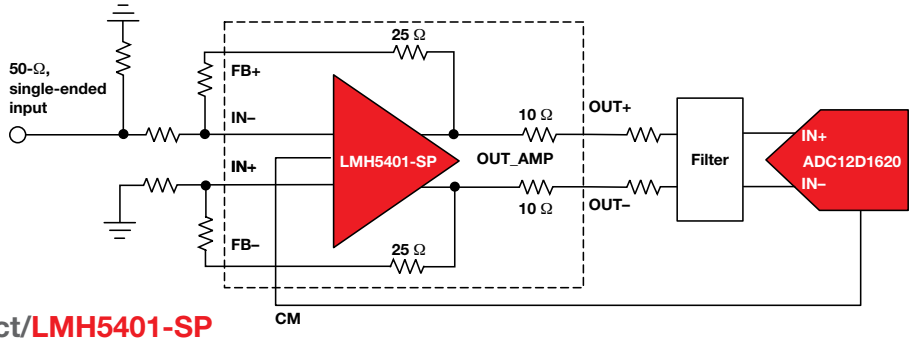

More information at **www.ti.com/product/LMH5401-SP**

Radiation-Hardened Amplifiers

Featured Products

Dual, High-Precision, Rail-to-Rail Output, Operational Amplifier
LMP2012QML-SP

Key Features
- Low guaranteed V_{IO} over temperature: 60 µV
- No popcorn noise
- Low quiescent current: 1.2 mA/Ch
- Wide supply range: 2.7 V–5 V
- Low bias current: –3 pA
- Gain-bandwidth product: 3 MHz
- High slew rate: 4 V/µs
- Rail-to-rail output
- No external capacitors required
- Available in 10-pin ceramic SOIC

Radiation Performance
- TID = 50 krad(Si) RHA

Applications
- Satellites
- Gyroscopes
- Star trackers
- Reaction wheels

Benefits
- Orderable as SMD: 5962L0620602VZA
- Very stable – temp coefficient
- RHA and QMLV qualified

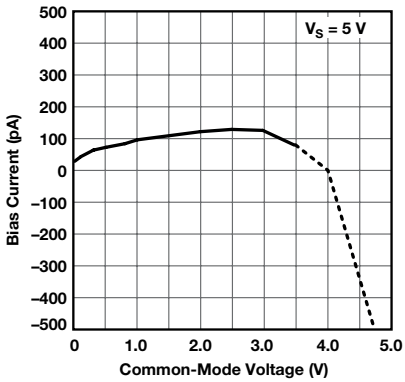

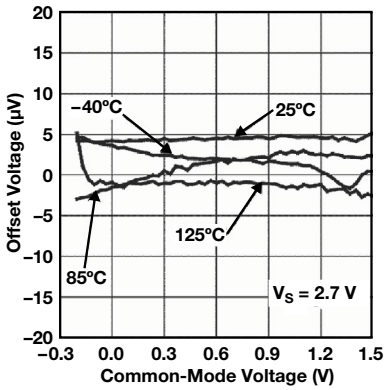

More information at **www.ti.com/product/LMP2012QML-SP**

Quad Femtoampere Bias Current, Precision RRIO Op Amp
LMP7704-SP

Key Features
- Ultra-low input bias current : ±200 fA (Typ)
- Low offset voltage: ±220 µV (Max)
- +2.7-V to +12-V supply operation
- Rail-to-rail input and output
- Unity gain bandwidth: 2.5 MHz
- Input voltage noise: 9 nV/√Hz
- Supply current: 725 µA/Ch
- Package: 14-lead CFP, 9.9 mm × 6.35 mm

Radiation Performance
- TID = 100 krad(Si) RHA
- SEL 75 MeV.cm^2/mg (125°C)

Applications
- Precision transimpedance amplifier for satellite telemetry
- High-impedance satellite sensor interface
- High-gain amplifiers

Benefits
- RHA qualified
- Exceptional DC performance with lowest bias current available for space applications
- Unity gain stable operation
- Rail-to-rail with precision allows single op amp for most board applications

Typical application

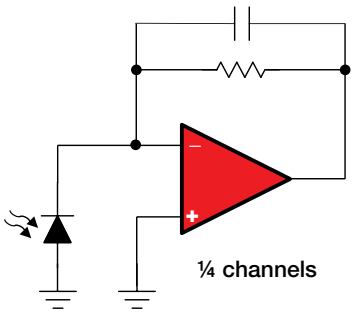

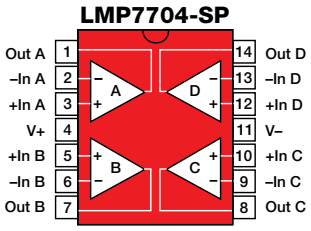

More information at **www.ti.com/product/LMP7704-SP**

15-GHz Lowest Noise Wideband PLL with Integrated VCO
LMX2615-SP

Key Features
- Space grade 40-MHz to 15-GHz wideband synthesizer with phase synchronization and JESD204B support
- –110 dBc/Hz closed-loop phase noise at 100 KHz offset at 15-GHz carrier frequency
- 45 fs RMS jitter at 8 GHz (100 Hz to 100 MHz)
- Ability to synchronize output phase with OSCin
- > 50 fixed pin programmable options
- Single 3.3-V supply
- 11 × 11 mm² 64-lead CQFP ceramic package

Radiation Performance
- TID = 100 krad(Si) RHA
- SEL/SEU immune to LET = 120 MeV-cm^2/mg (125°C)

Applications
- Space communications
- Space radar systems
- Phased-array antennas and beam forming

Benefits
- Wideband clock source to generate any clock frequency for high-speed data converter
- Support for generating or repeating SYSREF compliant to JESD204B standard
- Save board space and complexity by replacing discrete components with LMX2615
- High performance PLL can attain very low in-band noise and integrated jitter

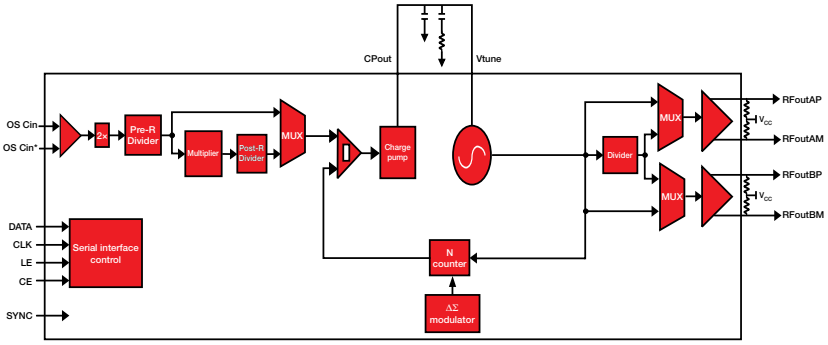

More information at **www.ti.com/product/LMX2615-SP**

JESD204B Clock Generator and Jitter Cleaner
LMK04832-SP

Key Features
- Supports 7 JESD204B targets (7 device clock and 7 SYSREF) or 14 differential output clocks
- Dual-loop platinum PLL architecture
- 54-fs RMS jitter at 2.5 GHz, 61-fs RMS jitter at 3.2 GHz (12 kHz–20 MHz)
- Noise floor –156.5 dBc/Hz @ 3200 MHz
- CML swing: 1.2 Vpp differential @ 3.2 GHz
- 2 integrated VCO to support 2 independent frequency plans
  - VCO0 = 2440 to 2580 MHz
  - VCO1 = 2945 to 3255 MHz
- 320-MHz PLL2 maximum phase detector frequency
- –230 dBc/Hz PLL2 FOM and –128 dBc/Hz PLL2 1/f
- SYSREF analog delay 25-ps step resolution
- 0-delay mode for either dual loop or single loop
- JESD204B sourced from distribution or clock generation mode/Hz
- Holdover mode when input clock is lost
- Package 64L ceramic

Radiation Performance
- TID = 100 krad(Si) RHA
- SEL Immune LET = 120 MeV-cm^2/mg
- Case temperature range: –55–125°C

Applications
Low jitter noise with JEDEC JESD204B
- Space communications
- JESD204B clocking systems

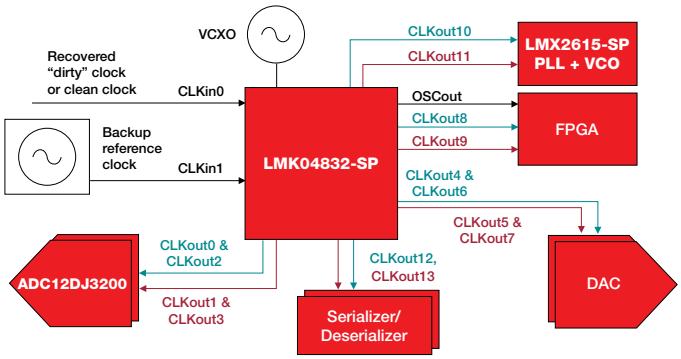

More information at **www.ti.com/product/LMK04832-SP**

Radiation-Hardened MCU
Featured Product

16-MHz Ultra-Low-Power Microcontroller with FRAM and 40 IO
MSP430FR5969-SP

Key Features
- Extremely low power consumption 16-bit RISC architecture:
  - 100 µA/MHz active
  - 0.02 µA shutdown, 0.4 µA standby
- 64 KB of non-volatile, Ferroelectric RAM (FRAM)
- Integrated peripherals for system housekeeping, telemetry
  - Real-time clock (RTC)
  - Five 16-bit timers
  - 16-channel analog comparator
  - 12-bit analog-to-digital converter (ADC) with 16 inputs, internal reference and sample-and-hold
  - Serial interfaces supporting UART, SPI, I^2C
  - Multi-function I/O ports
- Support for 32-kHz crystals or internal clock sources
- 48-pin VQFN and TQFP plastic package for reduced size and weight

Radiation Performance
- TID = 75 krad(Si), 50 krad(Si) RHA
- SEL immune to LET = 72 MeV-cm^2/mg

Applications
- Spacecraft distributed telemetry and housekeeping
- Sensor management and data logging
- Satellite remote terminal units

Benefits
- Reduced SWaP needed for system housekeeping functions
- Housekeeping/telemetry can be offloaded from FPGA
- Reusable RTU architecture across subsystems

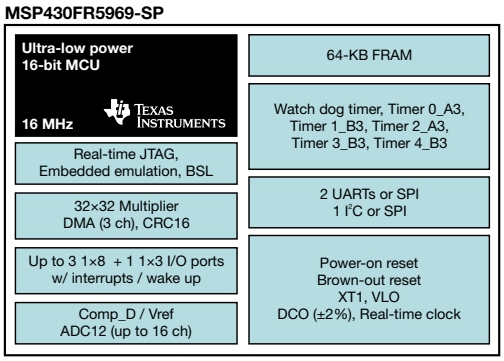

More information at **www.ti.com/product/MSP430FR5969-SP**

Radiation-Hardened Sensor Products
Featured Products

Very Wide Common Voltage Current Sense Amplifier with Split Stage for Filtering
INA901-SP

Key Features
- –15-V to 65-V common-mode range independent of supply
- 2.7-V to 16-V supply
- Split stages for filtering
- Bandwidth up to 130 kHz
- Gain: 20 V/V
- Package: Ceramic 8-lead HKX 6.5 mm × 6.5 mm

Radiation Performance
- TID = 50 krad(Si) RHA
- SEL immune to LET = 75 MeV-cm^2/mg

Applications
- Current monitor for current-mode control DC-DC converter
- Current measurement in an H-Bridge for motor control
- Latching current limiters on high common-mode bus
- Current sensing on GaN modules for increased efficiency

Benefits
- Eliminates need for additional protective components in the event of CMR reversals
- Preserves buffered voltage output and saves using an additional op amp
- Simplifies design of current control loops
- Enables a flexible circuit design
- Will be orderable as SMD: 5962L1821001VXC

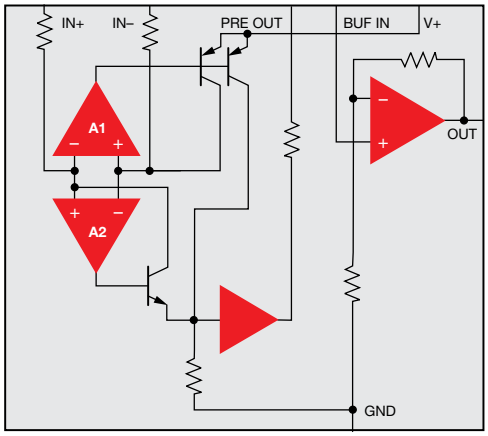

More information at **www.ti.com/product/INA901-SP**

Radiation-Hardened Sensor Products

Featured Products

Remote and Local Digital Temperature Sensor
TMP461-SP

Key Features
- Enables measurement of remote diode temperatures in the range of –64°C to +191°C
- Programmable calibration registers
- Remote diode temperature sensor accuracy: ±1.5°C
  Local temperature sensor accuracy: ±2°C
  (across extended temperature range of –55°C to +125°C)
- Accuracy post calibration: ±0.1C
- Supply and logic voltage range: 1.7 V to 3.6 V
- 35-µA operating current (1 SPS),
  3-µA shutdown current

Radiation Performance
- TID = 100 krad(Si) RHA
- SEL immune to LET = 76 MeV-cm^2/mg

Applications
- Spacecraft FPGA, ADCs, DACs and ASIC diode temperature monitoring
- Board temperature monitoring
- Spacecraft housekeeping and telemetry

Benefits
- RHA orderable as SMD: 5962R1721801VXC
- Thermal pad on bottom of package for low thermal resistance for board temperature monitoring
- Two-wire and SMBus serial interface compatible with pin-programmable address

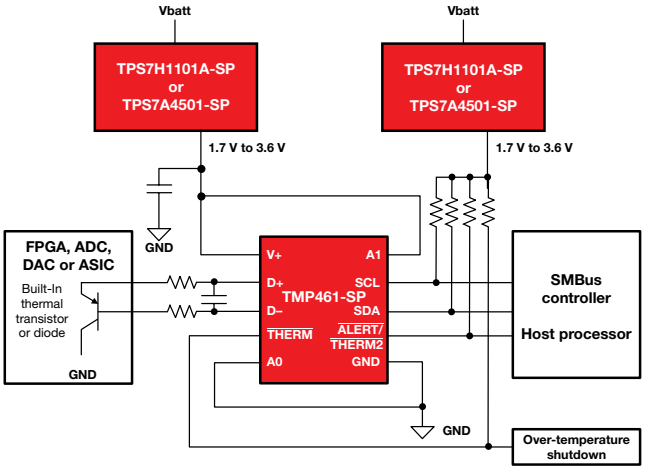

More information at **www.ti.com/product/TMP461-SP**

Space-Grade Parts List

Space-Grade Amplifiers and Comparators

Comparators

Part Number[1]	Military Spec	Qualification Level	TID Char. (krad)	TID RLAT (krad)	SEL (MeV•cm^2/mg)	Ch #	V_S Min (V)	V_S Max (V)	Propagation Delay Time (µs)	VICR (Max) (V)	VICR (Min) (V)	V_{OS} Max @ 25°C (Max) (mV)	Input Bias Current (±) (Max) (nA)	Rail-to-Rail	I_q per Ch (Typ) (mA)	Package Group	ECCN[2]
LM139AQML-SP	5962-96738	QMLV-RHA	100	100	Bipolar	4	2.0	36	0.7	34	0	2	100	Out	0.2	CDIP, CFP, Die	EAR99
LM193QML-SP	5962-94526	QMLV-RHA	100	100	Bipolar	2	2.0	36	0.7	34.5	0	5	100	Out	0.2	CDIP, TO-99, Die	EAR99
LM111QML-SP	5962-00524	QMLV-RHA	100	50, 100	Bipolar	1	5.0	36	0.2	34	0.5	3	100	No	5.1	CDIP, CFP, TO-99, Die	EAR99
LM119QML-SP	5962-96798	QMLV-RHA	100	100	Bipolar	2	5.0	36	0.025	33	3	4	500	Out	4	CDIP, CFP, TO-100, Die	EAR99
TLV1704-SEP	V62/18613	TI Space EP	30	20	43	4	2.2	36	0.56	36	2.2	2.5	15	In	0.055	TSSOP	EAR99
LM139-SP	5962-96738	QMLV	40	–	Bipolar	4	2.0	36	1.3	34.5	0	2	25	Out	0.2	CDIP, Die	EAR99
LM139-SP	5962-77008	QMLV	–	–	Bipolar	4	2.0	36	1.3	34.5	0	2	25	Out	0.2	CDIP	EAR99

[1]All device operating temperatures are –55 to 125°C.
*[2] ECCN information for products that are EAR99 are shown. For up-to-date ECCN information on any product, please request from: **gtc_eccn-hts-naftateam@list.ti.com**.*

Space-Grade Amplifiers and Comparators (Cont'd)

General-Purpose Op Amps

Part Number[1]	Military Spec	Qualification Level	TID Char. (krad)	TID RLAT (krad)	SEL (MeV•cm²/mg)	Ch #	V_s Min (V)	V_s Max (V)	GBW (MHz)	Slew Rate (typ) (V/µs)	V_{os} Max @ 25°C (mV)	Drift Typ (µV/C)	Rail-to-Rail	V_n (nV/√Hz)	I_{sc} Typ (mA)	I_{Bias} (Typ) (nA)	Available Packages	ECCN[2]
LM124AQML-SP	5962-99504	QMLV-RHA	100	100	Bipolar	4	3	3	1.0	1	2	7	In to V–	40	60	45	CDIP, CFP, Die	EAR99
LM158QML-SP	5962-87710	QMLV-RHA	100	100	Bipolar	2	3	32	0.7	0.5	2	7	In to V–	40	30	45	CDIP, CFP, TO-99, Die	EAR99
LF411QML-SP	5962-11222	QMLV-RHA	100	100	Bipolar	1	10	44	3.0	15	2	10	No	18	25	0.05	CFP	EAR99
LM101AQML-SP	5962-99515	QMLV-RHA	50	50	Bipolar	1	10	44	1.0	0.3	2	3	In to V+	15	25	30	CDIP, TO-99, Die	EAR99
LM124-SP	5962-99504	QMLV	50	–	Bipolar	4	3	32	1.2	0.5	3	7	In to V–	35	40	30	CDIP, Die	EAR99
LM124-SP	5962-77043	QMLV	–	–	Bipolar	4	3	32	1.2	0.5	5	7	In to V–	35	40	20	CDIP	EAR99
LM148JAN-SP	M38510/110	JANS	–	–	Bipolar	4	10	44	1.0	0.5	5	15	No	60	25	30	CDIP	EAR99

Precision Op Amps (V_{OS} < 1 mV)

Part Number[1]	Military Spec	Qualification Level	TID Char. (krad)	TID RLAT (krad)	SEL (MeV•cm²/mg)	Ch #	V_s Min (V)	V_s Max (V)	GBW (Typ) (MHz)	Slew Rate (Typ) (V/µs)	V_{os} Max @ 25°C (mV)	Drift Typ (µV/C)	Rail-to-Rail	I_q Typ (mA)	V_n (nV/√Hz) 1 kHz	I_{Bias} (Typ) (pA)	Available Packages	ECCN[2]
LMP7704-SP	5962-19206	QMLV-RHA	100	100	85	4	2.7	12	2.5	1.5	0.200	1	In, Out	0.73	9	0.2	CFP	EAR99
LMP2012QML-SP	5962-06206	QMLV-RHA	50	50	77.5	2	2.7	5	3	4.0	0.036	0.015	In to V–, Out	0.93	35	3	CDIP, CFP, Die	EAR99
OPA4277-SP	5962-16209	QMLV-RHA	50	50	85	4	4	36	1	0.8	0.065	0.1	No	0.79	8	500	CFP, CDIP-SB, Die	EAR99
TLC2201-SP	5962-90882	QMLV	–	–	–	1	4.6	16	1.8	2.5	0.200	7	In to V–, Out	1.1	8	1	LCCC	EAR99

High-Speed Op Amps (≥ 50 MHz)

Part Number[1]	Military Spec	Qualification Level	TID Char. (krad)	TID RLAT (krad)	SEL (MeV•cm²/mg)	Ch #	V_s Min (V)	V_s Max (V)	GBW (MHz)	Slew Rate (Typ) (V/µs)	V_n (nV/√Hz)	V_{os} Max @ 25°C (mV)	Drift Typ (µV/C)	Rail-to-Rail	I_q typ (mA) per Ch	I_{sc} Typ (mA)	I_{Bias} (Typ) (nA)	I_{Bias} (max) (nA)	Available Packages	ECCN[2]
LM6172QML-SP	5962-95604	QMLV-RHA	300	100, 300	Bipolar	2	5.5	36	100	3000	12	1.5	6	No	2.3	85	1200	2500	CDIP, CFP, Die	EAR99
LM7171QML-SP	5962-95536	QMLV-RHA	300	300	Bipolar	1	5.5	36	200	4100	14	1	35	No	6.5	100	2700	10000	CDIP, CFP	EAR99
LMH6628QML-SP	5962-02545	QMLV-RHA	300	300	Bipolar	2	5	12	300	550	2	2		No	9.0	85	7000	10000	CDIP, CFP	EAR99
LMH6702QML-SP	5962-02546	QMLV-RHA	300	300	Bipolar	1	10	12	1700	3100	4.5	4.5	7	No	12.5	80	6000	15000	CDIP, CFP	EAR99
LMH6715QML-SP	5962-02547	QMLV-RHA	300	300	Bipolar	2	8	12	480	1300	3.4	6	30	No	5.8	70	5000	12000	CDIP	EAR99
THS4304-SP	5962-07219	QMLV	150	–	Bipolar	1	2.7	5	3000	790	8.5	4	5	No	18	100	—	12000	CFP	EAR99

Fully Differential Amplifiers (FDAs)

Part Number[1]	Military Spec	Qualification Level	TID Char. (krad)	TID RLAT (krad)	SEL (MeV•cm²/mg)	V_s Min (V)	V_s Max (V)	GBW (MHz)	BW @ A_{CL} (MHz)	Min. A_{CL} (MHz)	Slew Rate (Typ) (V/µs)	V_n at Flatband (nV/√Hz)	CMRR (Typ) (dB)	Rail-to-Rail	V_{os} Max @ 25°C (mV)	I_{Bias} (Max) (µA)	I_q Typ (mA) per Ch	Available Packages	ECCN[2]
LMH5401-SP	5962-17214	QMLV-RHA	100	100	85	3.15	5.25	6500	4100	5	17500	1.25	72	No	5	60	60	LCCC	EAR99
LMH5485-SP	5962-19204	QMLV-RHA	100	100	75	2.7	5.4	850	620	1	1500	2.2	100	In to V–, Out	0.45	14.5	10.1	CFP	EAR99
THS4511-SP	5962-07222	QMLV	150	–	Bipolar	3.75	5.25	3000	1100	1	5100	2	80	In to V–	4	15.5	39.2	CFP	EAR99
THS4513-SP	5962-07223	QMLV	150	–	Bipolar	3	5.5	3000	1100	1	5100	2.2	90	No	4	15.5	37.7	CFP	EAR99

Sample and Hold Amplifiers

Part Number[1]	Military Spec	Qualification Level	TID Char. (krad)	TID RLAT (krad)	SEL (MeV•cm²/mg)	V_s Min (V)	V_s Max (V)	Acquisition Time (µs)	PSRR (dB)	V_{os} Max @ 25°C (mV)	Droop Rate (V/ms)	I_q Typ (mA)	Available Packages	ECCN[2]
LF198QML-SP	5962-87608	QMLV	–	–	Bipolar	10	36	6	80	3.5	0.001	5.5	CFP	EAR99
LF198JAN-SP	M38510/125	JANS	–	–	Bipolar	10	36	6	80	3	0.001	5.5	TO-99	EAR99

[1] All device operating temperatures are –55 to 125°C.
*[2] ECCN information for products that are EAR99 are shown. For up-to-date ECCN information on any product, please request from: **gtc_eccn-hts-naftateam@list.ti.com**.*

Space-Grade Data Converters

Precision ADCs (≤ 10 MSPS)

Part Number[1]	Military Spec	Qualification Level	TID Char. (krad)	TID RLAT (krad)	SEL (MeV•cm²/mg)	Res. (Bits)	Sample Rate (Max) (kSPS)	# of Ch	Multi-Ch Config.	SNR (dB)	INL (Max) (± LSB)	Input Type	Ref. Voltage (V)	Power (Typ) (mW)	Type	Package Group	ECCN[2]
ADC128S102QML-SP	5962-07227	QMLV-RHA	100	100	120	12	1000	8	Multiplexed	72	1.1	Single ended	Supply	2.3	SAR	CFP, Die	EAR99†
ADS1278-SP	–	TI Space Grade	75	50	68	24	128	8	Simultaneous	111	201.4	Differential	External	530	ΔΣ	CQFP	EAR99‡
ADS1282-SP	5962-14231	QMLV-RHA	50	50	60	32	4	2	Multiplexed	130	–	Differential	External	25	ΔΣ	CFP	EAR99‡

*†EAR99 only pertains to the Engineering Model device, ADC128S102WGMPR. For up-to-date ECCN information contact: **gtc_eccn-hts-naftateam@list.ti.com***
‡EAR99 only pertains to certain device variants, including Engineering Models (ADS1278HFQ/EM and ADS1282HKV/EM), and some Flight Models (ADS1278WHFQ-MLS and 5962L1423102VXC).

Precision DACs (≤ 10 MSPS)

Part Number[1]	Military Spec	Qualification Level	TID Char. (krad)	TID RLAT (krad)	SEL (MeV•cm²/mg)	Res. (Bits)	Sample/Update Rate (MSPS)	Settling Time (Typ) (µs)	DNL (Typ) (±LSB)	INL (Typ) (±LSB)	Zero Code Error (mV)	Supply Voltage (V)	Power (Typ) (mW)	Architecture	Package Group	ECCN[2]
DAC121S101QML-SP	5962-07226	QMLV-RHA	100	100	120	12	1.8	12.5	–0.10/+0.21	2.75	2.12	2.7 to 5.5	0.52	String	CFP, Die	EAR99†

*†EAR99 only pertains to the Engineering Model device, DAC121S101WGMPR. For up-to-date ECCN information contact: **gtc_eccn-hts-naftateam@list.ti.com***

High-Speed ADCs (> 1 GSPS)

Part Number[1]	Military Spec	Qualification Level	TID Char. (krad)	TID RLAT (krad)	SEL (MeV•cm²/mg)	Sample Rate (Max) (MSPS)	Res. (Bits)	# of Ch	Analog Input BW (–3 dB) (GHz)	SNR (dB)	ENOB (Bits)	SFDR (dB)	Input Range (V_{p-p})	Input Buffer	Power (Typ) (mW)	Architecture	Package Group
ADC12DJ3200QML-SP	5962-18209	QMLV-RHA	300	300	120	3200, 6400	12	1, 2	7.3	57.2	8.9	76.0	0.80	Yes	3000	Folding Interpolating	CCGA, CLGA
ADC12D1620QML-SP	5962-12205	QMLV-RHA	300	300	120	1600, 3200	12	1, 2	2.4	59.8	9.5	67.4	0.80	Yes	3880	Folding Interpolating	CCGA, CLGA
ADC12D1600QML-SP	–	TI Space Grade RHA	300	300	120	1600, 3200	12	1, 2	2.4	58.2	9.3	67.3	0.80	Yes	3880	Folding Interpolating	CCGA
ADC08D1520QML-SP	5962-07214	QMLV-RHA	300	300	120	1500, 3000	8	1, 2	2.0	47.0	7.4	55.5	0.87	Yes	2000	Folding Interpolating	CQFP
ADC10D1000QML-SP	–	TI Space Grade RHA	100	100	120	1000, 2000	10	1, 2	2.8	56.8	9.0	67.6	0.80	Yes	2770	Folding Interpolating	CCGA
ADS5400-SP	5962-09240	QMLV	50	–	–	1000	12	1	2.15	58.5	9.55	77.9	2.00	Yes	2200	Pipeline	CQFP

High-Speed ADCs (> 10 MSPS and < 1 GSPS)

Part Number[1]	Military Spec	Qualification Level	TID Char. (krad)	TID RLAT (krad)	SEL (MeV•cm²/mg)	Sample Rate (Max) (MSPS)	Res. (Bits)	# of Ch	Analog Input BW (MHz)	SNR (dB)	ENOB (Bits)	SFDR (dB)	Input Range (V_{p-p})	Input Buffer	Power (Typ) (mW)	Type	Pkg. Group	ECCN[2]
ADS5400-SP	5962-09240	QMLV	50	–	–	1000	12	1	2150	58.5	9.55	77.9	2.0	Yes	2200	Pipeline	CQFP	–
ADS5463-SP	5962-07208	QMLV-RHA	100	100	86	500	12	1	2000	65.4	10.1	65.0	2.2	Yes	2250	Pipeline	CQFP	–
ADS5474-SP	5962-13208	QMLV-RHA	200	100	87	400	14	1	1440	70.5	10.9	78.0	2.2	Yes	2500	Pipeline	CQFP	–
ADS5444-SP	5962-07207	QMLV	–	–	86	250	13	1	500	69.1	11.3	84.0	2.2	Yes	2250	Pipeline	CQFP	–
ADC14155QML-SP	5962-06262	QMLV-RHA	100	100	121	155	14	1	1100	70.1	11.3	82.3	2.0	No	967	Pipeline	CQFP	EAR99†
ADS5424-SP	5962-07206	QMLV	150	–	–	105	14	1	570	72.4	11.7	82.6	2.2	No	1900	Pipeline	CQFP	–

†EAR99 only pertains to the Engineering Model device, ADC14155W-MPR.

[1]All device operating temperatures are –55 to 125°C.
*[2] ECCN information for products that are EAR99 are shown. For up-to-date ECCN information on any product, please request from: **gtc_eccn-hts-naftateam@list.ti.com**.*

Space-Grade Data Converters (Cont'd)

High-Speed DACs (> 10 MSPS)

Part Number[1]	Military Spec	Qualification Level	TID Char. (krad)	TID RLAT (krad)	SEL (MeV•cm²/mg)	Res. (Bits)	Update Rate (Max) (MSPS)	Settling Time (Typ) (ns)	SNR (dB)	SFDR (dBc)	THD (dBc)	Interpolation	Power (Typ) (mW)	Architecture	Interface	Pkg. Group	ECCN[2]
DAC5670-SP	5962-07247	QMLV	100	–	–	14	2400	3.5	52	55	52	1×, 2×	2000	Current sink	Parallel LVDS	CBGA	–
DAC5675A-SP	5962-07204	QMLV	100	–	109	14	400	12	67	82	70	None	660	Current sink	Parallel LVDS	CQFP	EAR99[†]

[†]EAR99 only pertains to certain device variants, including the Engineering Model (DAC5675AHFG/EM) and one Flight Model variant (5962-0720402VXC).
*For up-to-date ECCN information contact: **gtc_eccn-hts-naftateam@list.ti.com***

Analog Front End: CCD/CIS Imaging

Part Number[1]	Military Spec	Qualification Level	TID Char. (krad)	TID RLAT (krad)	SEL (MeV•cm²/mg)	# of Ch	Resolution (Bit)	Sampling Rate (MSPS)	PGA Range (dB)	Fine Offset DAC Range (mV)	Power per Channel (mW/Ch)	Package	ECCN[2]
LM98640QML-SP	5962-18203	QMLV-RHA	100	100	120	2	14	5 to 40	-3 to 18	±5	122	CQFP	EAR99

Space-Grade Clock + Timing

RF PLLs and Synthesizer

Part Number[1]	Military Spec	Qualification Level	TID Char. (krad)	TID RLAT (krad)	SEL (MeV•cm²/mg)	Normalized PLL Phase Noise (dBc/Hz)	1/f Noise (10-kHz Offset at 1-GHz Carrier) (dBc/Hz)	Output Frequency (Min) (MHz)	Output Frequency (Max) (MHz)	Supply Voltage (V)	Features	Package Body Size – W × L (mm²)	Package Group	ECCN[2]
LMX2615-SP	5962-17236	QMLV-RHA	100	100	120	–236	–129	40	15200	3.2 to 3.45	JESD204B	10.90 × 10.90	CQFP	EAR99

Clock Jitter Cleaner

Part Number[1]	Military Spec	Qualification Level	TID Char. (krad)	TID RLAT (krad)	SEL (MeV•cm²/mg)	# of In	# of Out	RMS Jitter (fs)	Output Freq. (Min) (MHz)	Output Freq. (Max) (MHz)	Supply Voltage (V)	Input Type	Output Type	Package Group	ECCN[2]
CDCM7005-SP	5962-07230	QMLV	50	–	80	2	5	–	0	1500	3.0 to 3.6	LVCMOS (REF_CLK), LVPECL (VCXO_CLK)	LVCMOS, LVPECL	CQFP	EAR99
LMK04832-SP	5962-17237	QMLV-RHA	100	100	120	3	15	54	0.305	3255	3.135 to 3.465	LVCMOS, LVDS, LVPECL	CML, LVPECL, LCPECL, HSDS, LVDS, LVCMOS	CQFP	EAR99

Clock Buffer

Part Number[1]	Military Spec	Qualification Level	TID Char. (krad)	TID RLAT (krad)	SEL (MeV•cm²/mg)	Additive RMS Jitter (Typ) (fs)	Output Freq. (Max) (MHz)	Number of Outputs	Output Skew (ps) (MHz)	Supply Voltage (V)	Input Type	Output Type	Package Body Size – W × L (mm²)	Package Group	ECCN[2]
CDCLVP111-SP	5962-16207	QMLV	75	–	69	40	3500	10	50	2.375 to 3.8	CML, LVDS, LVPECL, SSTL	LVPECL	9.078 × 9.078	CQFP	EAR99

Timer

Part Number[1]	Military Spec	Qualification Level	TID Char. (krad)	TID RLAT (krad)	SEL (MeV•cm²/mg)	V_{CC} Range (V)	Output Level	Package	ECCN[2]
SE555-SP	5962-98555	QMLV	25	–	Bipolar	4.5 to 16.5	TTL	CDIP	EAR99

[1]All device operating temperatures are –55 to 125°C.
*[2] ECCN information for products that are EAR99 are shown. For up-to-date ECCN information on any product, please request from: **gtc_eccn-hts-naftateam@list.ti.com**.*

Space-Grade Interface

LVDS

Part Number[1]	Military Spec	Qualification Level	TID Char. (krad)	TID RLAT (krad)	SEL (MeV•cm²/mg)	Device Function	# of TX	# of RX	Supply Voltage (V)	Speed (Mbps)	Common-Mode Range (V)	Offset Voltage (V)	Protocols	Package Group	ECCN[2]
SN55LVDS31-SP	5962-97621	QMLV	150	–	110	Driver	4	–	3.3	400	–	1.2	LVDS	CFP	EAR99
DS90C031QML-SP	5962-95833	QMLV-RHA	100	100	120	Driver	4	–	5.0	155.5	–	1.2	LVDS	CFP, Die	–
DS90LV031AQML-SP	–	TI Space Grade	–	–	–	Driver	4	–	3.3	400	–	1.2	LVDS	CFP	EAR99
SN55LVDS32-SP	5962-97622	QMLV	100	–	110	Receiver	–	4	3.3	100	0.2 to 2.2	–	LVDS	CFP	EAR99
SN55LVDS33-SP	5962-07248	QMLV	100	–	90	Receiver	–	4	3.3	400	–4.0 to 5.0	–	LVDS	CFP	EAR99
DS90C032QML-SP	5962-95834	QMLV-RHA	50	50	120	Receiver	–	4	5.0	155.5	0.2 to 2.2	–	LVDS	CFP, Die	EAR99
DS90LV032AQML-SP	–	TI Space Grade	–	–	–	Receiver	–	4	3.3	400	0.2 to 2.2	–	LVDS	CFP	EAR99
SN55LVCP22-SP	5962-11242	QMLV	100	–	–	Crosspoint	2	2	3.3	1000	0.05 to 3.95	1.2	LVDS, LVPECL, CML	CFP	–
SN55LVCP22A-SP	5962-11242	QMLV-RHA	100	100	75	Crosspoint	2	2	3.3	1000	0.05 to 3.95	1.2	LVDS, LVPECL, CML	CFP	–

RS-485 and RS-422

Part Number[1]	Military Spec	Qualification Level	TID Char. (krad)	TID RLAT (krad)	SEL (MeV•cm²/mg)	Device Type	No. of TX	No. of RX	Duplex	Supply Voltage (Nom) (V)	Signaling Rate (Max) (Mbps)	Fault Protection (V)	# of nodes	Common mode range	I_{CC} (Max) (mA)	Package Group	ECCN[2]
DS16F95QML-SP	5962-89615	QMLV-RHA	300	300	Bipolar	Transceiver	1	1	Half	5.0	10	–12 to 12	32	–7 to 12	0.5	CFP, Die	EAR99
SN65C1168E-SEP	V62/19606	TI Space EP	30	20	43	Transceiver	2	2	Full	5.0	10	–10 to 15	32	–7 to 7	17	TSSOP	EAR99
DS26F31MQML-SP	5962-78023	QMLV-RHA	300	300	Bipolar	Driver	4	–	Half	5.0	10	–	10	–6 to 6	40	CFP	EAR99
DS96F174MQML-SP	5962-90765	QMLV	–	–	Bipolar	Driver	4	–	Half	5.0	10	–	32	–7 to 12	50	CDIP	EAR99
DS26F32MQML-SP	5962-78020	QMLV-RHA	100	100	Bipolar	Receiver	–	4	Half	5.0	10	–	10	–6 to 6	50	CDIP	EAR99
DS96F175MQML-SP	5962-90766	QMLV	–	–	Bipolar	Receiver	–	4	Half	5.0	10	–	32	–7 to 12	75	CDIP	EAR99
AM26LS33A-SP	5962-78020	QMLV	25	–	Bipolar	Receiver	–	4	Half	5.0	10	–25 to 25	32	–15 to 15	70	CDIP	EAR99

CAN

Part Number[1]	Military Spec	Qualification Level	TID Char. (krad)	TID RLAT (krad)	SEL (MeV•cm²/mg)	Signaling Rate (Max) (Mbps)	Supply Voltage (Nom) (V)	Common Mode Range	Fault Protection (V)	Features	Package Group	ECCN[2]
SN55HVD233-SP	5962-14209	QMLV-RHA	50	50	86	1	3.0 to 3.6	–7 to 12	–16 to 16	Diagnostic loopback	CFP	EAR99
SN55HVD233-SEP	V62/18617	TI Space EP	30	20	43	1	3.0 to 3.6	–7 to 12	–16 to 16	Diagnostic loopback	SOIC	EAR99

Ethernet PHY

Part Number[1]	Military Spec	Qualification Level	TID Char. (krad)	TID RLAT (krad)	SEL (MeV•cm²/mg)	Data Rate (Mbps)	Interface Type	Supply Voltage (V)	IO Supply Options (Typ) (V)	Features	Package Body Size– W × L (mm²)	Package Group	ECCN[2]
DP83561-SP	5962-20216	QMLV-RHA	100	100	78	10/100/1000	RGMII, MII	1.1 and 2.5	1.8, 2.5, 3.3	SEFI Monitoring Suite	10.90 × 10.90	CQFP	EAR99

Serializers, Deserializers (SerDes)

Part Number[1]	Military Spec	Qualification Level	TID Char. (krad)	TID RLAT (krad)	SEL (MeV•cm²/mg)	Signaling Rate (Gbps)	V_{CC} (V)	Power (mW)	Package Group	ECCN[2]
TLK2711-SP	5962-05221	QMLV	25	–	67.9	1.6 to 2.5	2.5	< 500	CQFP	EAR99

Line Driver, Line Receiver

Part Number[1]	Military Spec	Qualification Level	TID Char. (krad)	TID RLAT (krad)	SEL (MeV•cm²/mg)	Device Type	No. of TX	No. of RX	Supply Voltage (Nom) (V)	Common Mode Range	I_{CC} (Max) (mA)	Input Signal	Output Signal	Package Group	ECCN[2]
SN55183-SP	5962-79009	QMLV	40	–	Bipolar	Driver	2	–	5.0	–	10	TTL	Differential	CDIP	EAR99
SN55182-SP	5962-79008	QMLV	40	–	Bipolar	Receiver	–	2	5.0	–15 to 15	9.4	Differential	TTL	CDIP	EAR99

[1] *All device operating temperatures are –55 to 125°C.*
[2] *ECCN information for products that are EAR99 are shown. For up-to-date ECCN information on any product, please request from:* ***gtc_eccn-hts-naftateam@list.ti.com***.

Space-Grade Sensing

Current Sense Amplifiers

Part Number[1]	Military Spec	Qualification Level	TID Char. (krad)	TID RLAT (krad)	SEL (MeV•cm²/mg)	V_s Min (V)	V_s Max (V)	Common-Mode Voltage (min) (V)	Common-Mode Voltage (max) (V)	Bandwidth (kHz)	Gain (V/V)	V_{os} Max @ 25°C (mV)	Gain Error (%)	I_q Typ (mA)	Available Packages	ECCN[2]
INA901-SP	5962-18210	QMLV-RHA	50	50	75	2.7	16	–15	65	130	20	2.5	1	0.9	CFP	EAR99
INA240-SEP	V62/18615	TI Space EP	30	20	43	2.7	5.5	–4	80	400	20	0.05	0.2	2.6	TSSOP	EAR99

Digital Output Temperature Sensor

Part Number[1]	Military Spec	Qualification Level	TID Char. (krad)	TID RLAT (krad)	SEL (MeV•cm²/mg)	# of Remote Temp. Sensor	# of Local Temp. Sensor	Remote Sensor Accuracy (±°C)	Local Sensor Accuracy (±°C)	Remote Temp. Range (°C)	Local Temp. Range (°C)	Temp. Resolution (°C)	Interface	Available Package	ECCN[2]
TMP461-SP	5962-17218	QMLV-RHA	100	100	76	1	1	1.5	2	–64 to 191	–55 to 125	0.0625	I²C, SMBus, 2-Wire	CFP	EAR99

Space-Grade Motor Control

Brushless DC (BLDC) Driver

Part Number[1]	Military Spec	Qualification Level	TID Char. (krad)	TID RLAT (krad)	SEL (MeV•cm²/mg)	Architecture	VS (Min) (V)	VS (Max) (V)	VS (ABS Max) (V)	Peak Output Current (A)	Gate Drive (A)	Control Interface	Package Body Size (W×L, mm)	Package Group	ECCN[2]
UC1625-SP	5962-91689	QMLV	40	–	Bipolar	Gate driver	10	18	20	0.5	0.2	1 × PWM	35.56 × 7.49	CDIP-SB	EAR99

Brushed DC (BDC) and Stepper Driver

Part Number[1]	Military Spec	Qualification Level	TID Char. (krad)	TID RLAT (krad)	SEL (MeV•cm²/mg)	VS (Min) (V)	VS (Max) (V)	Peak Output Current (A)	Control Mode	Control Interface	Package Body Size (W×L, mm)	Package Group	ECCN[2]
UC1637-SP	5962-89957	QMLV	50	–	Bipolar	±2.5	±20	0.5	PWM	Hardware	6.92 × 13.09	CFP	EAR99

[1] All device operating temperatures are –55 to 125°C.
*[2] ECCN information for products that are EAR99 are shown. For up-to-date ECCN information on any product, please request from: **gtc_eccn-hts-naftateam@list.ti.com**.*

Space-Grade Power Management

Buck Converters

Part Number[1]	Military Spec	Qualification Level	TID Char. Max. (krad)	TID RLAT (krad)	SEL (Max) (MeV•cm²/mg)	I_{out} (Max) (A)	V_{IN} (Min) (V)	V_{IN} (Max) (V)	V_{OUT} (Min) (V)	V_{OUT} (Max) (V)	Control Mode	f_S (Min) (kHz)	f_S (Max) (kHz)	Duty Cycle (Max) (%)	Minimum On-Time (Max) (ns)	Iq (Typ) (mA)	Package Group	ECCN[2]
TPS50601-SP	5962-10221	QMLV-RHA	100	100	85	6	3	6.3	0.795	6.35	Current mode	100	1000	95%	175	5	CFP, Die	EAR99
TPS50601A-SP	5962-10221	QMLV-RHA	100	100	75	6	3	7	0.804	6.70	Current mode	100	1000	100%	235	5	CFP, Die	EAR99
TPS7H4001-SP	5962-18205	QMLV-RHA	100	100	75	18	3	7	0.604	6.65	Current mode	100	1000	100%	235	4	CFP, Die	EAR99
TPS7H4010-SEP	V62/19623	TI Space EP	30	20	43	6	3.5	32	1	29	Current mode	350	2200	95%	82	0.015	WQFN	EAR99

Linear Regulators (LDOs)

Part Number[1]	Military Spec	Qualification Level	TID Char. Max. (krad)	TID RLAT (krad)	SEL (Max.) (MeV•cm²/mg)	I_{OUT} (Max) (A)	V_{IN} (Min) (V)	V_{IN} (Max) (V)	V_{OUT} (Min) (V)	V_{OUT} (Max) (V)	V_{DO} (Typ) (mV)	Acc. (%)	Noise (µVrms)	PSRR @ 100 KHz (dB)	Output Options	Package Group	ECCN[2]
TPS7A4501-SP	5962-12224	QMLV-RHA	100	100	86	1.5	2.3	20	1.21	20	270	3	35	38	Adj.	CFP, Die	EAR99
TPS7H1101A-SP	5962-13202	QMLV-RHA	100	100	85	3	1.5	7	0.8	6.65	210	2	20	25	Adj.	CFP, Die	EAR99
TPS73801-SEP	V62/18616	TI Space EP	30	20	43	1	2.2	20	1.21	20	240	3	45	63	Adj.	SOT-223	EAR99
LM117QML-SP	5962-99517	QMLV-RHA	100	100	Bipolar	1.5	4.2	40	1.25	37	1200	4	75	40	Adj.	CFP, TO-3, TO-2, Die	EAR99
LM117HVQML-SP	5962-07229	QMLV-RHA	100	100	Bipolar	0.5	4.2	60	1.25	57	1500	2	1710	40	Adj.	CFP, TO-3, Die	EAR99
LM137QML-SP	5962-99517	QMLV-RHA	30	30	Bipolar	1.5	–40	–4.2	–37.0	–1.2	3000	4	1110	30	Adj.	TO-3	EAR99
LM137JAN-SP	M38510/118	JANS	–	–	Bipolar	1.5	–40	–4.2	–37.0	–1.2	3000	4	1110	30	Adj.	TO-2	EAR99
LM2940QML-SP	5962-89587	QMLV-RHA	100	100	Bipolar	1	6	26	5	5	500	5	350	50	5.0	CFP, Die	EAR99
LM2941QML-SP	5962-91667	QMLV-RHA	100	100	Bipolar	1	6	26	5	20	500	5	600	67	Adj.	CFP, Die	EAR99
LM723JAN-SP	M38510/102	JANS	–	–	Bipolar	0.15	9.5	40	2	37	3000	3	86	0	Adj.	CDIP, TO-100	EAR99
LP2953QML-SP	5962-92336	QMLV	–	–	Bipolar	0.25	2.3	30	1.2	29	470	3	80	32	Adj., 5.0	CFP, Die	EAR99

Linear Regulator (LDO) Controllers

Part Number[1]	Military Spec	Qualification Level	TID Char. Max. (krad)	TID RLAT (krad)	SEL (Max) (MeV•cm²/mg)	I_{drive} (Max) (mA)	V_{OUT} (min) (V)	V_{OUT} (max) (V)	Package	ECCN[2]
UC1832-SP	5962-93265	QMLV	40	–	Bipolar	100	2	40	CDIP, LCCC	EAR99
UC1834-SP	5962-87742	QMLV	40	–	Bipolar	200	1.5	40	CDIP, LCCC	EAR99

DDR Memory Power

Part Number[1]	Military Spec	Qualification Level	TID Char. (Max) (krad)	TID RLAT (Max) (krad)	SEL (Max) (MeV•cm²/mg)	Regulator Type	I_{OUT} VTT (Max) (A)	V_{IN} (Min) (V)	V_{IN} (Max) (V)	V_{OUT} VTT (Min) (V)	DDR Memory Type(s)	V_{IN} Bias (Min) (V)	V_{IN} Bias (Max) (V)	Package Group	ECCN[2]
TPS7H3301-SP	5962-14228	QMLV-RHA	100	100	70	Linear	3.0	0.9	3.5	0.6	DDR, DDR2, DDR3, DDR3L, DDR4, LPDDR2, LPDDR3	2.375	3.5	CFP	EAR99

eFuses and Load Switch

Part Number[1]	Military Spec	Qualification Level	TID Char. (Max) (krad)	TID RLAT (krad)	SEL (Max) (MeV•cm²mg)	V_{IN} Range (V)	Type	R_{ON} (Typ) (mΩ)	Continous Current Load (Max) (A)	Current Limit Range (A)	Package	ECCN[2]
TPS7H2201-SP	5962-17220	QMLV-RHA	100	100	75	1.5 to 7.0	eFuse	35	6	0.5–7.0	CFP, Die	EAR99

[1] All device operating temperatures are –55 to 125°C.
*[2] ECCN information for products that are EAR99 are shown. For up-to-date ECCN information on any product, please request from: **gtc_eccn-hts-naftateam@list.ti.com**.*

Space-Grade Power Management (Cont'd)

Shunt Voltage Reference

Part Number	Military Spec	Qualification Level	TID Char. (krad)	TID RLAT (krad)	SEL (MeV•cm²/mg)	V_O (V)	Initial Accuracy (Max) (%)	Accuracy Over Temp. (%)	I_z for Reg. (Min) (µA)	I_{out}/I_z (Max) (mA)	Output Noise (µVrms)*	V_n (nV/√Hz) @ 1 kHz	Temp. Coeff. (Typ) at 25°C (ppm/°C)	Operating Temp. Range (°C)	Package Group	ECCN[2]
LM136A-2.5QML-SP	5962-00501	QMLV-RHA	100	100	Bipolar	2.5	1.0	–2.4/+1.6	400	10	–	120	26	–55 to 125	TO, Die	EAR99
LM185-1.2QML-SP	5962-87594	QMLV-RHA	100	100	Bipolar	1.2	1.0	+0.42/+5	10	20	28	400	–	–55 to 125	TO	EAR99
LM185-2.5QML-SP	5962-87594	QMLV	100	–	Bipolar	2.5	0.8	±3	20	20	42	800	–	–55 to 125	TO	EAR99
LM4050QML-SP (2.5 V)	5962-09235	QMLV-RHA	100	100	Bipolar	2.5	0.1	±0.7	65	15	50	–	3	–55 to 125	CFP	EAR99
LM4050QML-SP (5.0 V)	5962-09235	QMLV-RHA	100	100	Bipolar	5	0.1	±0.74	74	15	100	–	9	–55 to 125	CFP	EAR99
TL1431-SP	5962-99620	QMLV-RHA	150	100	86	2.5–36	0.4	±2	450	100	–	122	38	–55 to 125	CDIP, CFP	EAR99
TL1431-DIE	–	Tested die	100	–	Bipolar	2.5–36	0.4	–	450	100	–	122	–	25	Die	EAR99

** For frequencies 10 Hz ≤ f ≤ 10 KHz.*

Supervisor and Reset IC

Part Number	Military Spec	Qualification Level	TID Char. (Max) (krad)	TID RLAT (krad)	SEL (Max) (MeV•cm²mg)	V_{CC} Range (V)	Threshold Voltage	Accuracy (%)	Operating Temp. Range (°C)	Package	ECCN[2]
TL7700-SEP	V62/19602	TI Space EP	30	20	43	1.8 to 40	Adjustable	2	–55 to 125	TSSOP	EAR99

PWM Controllers

Part Number	Military Spec	Qualification Level	TID Char. Max (krad)	TID RLAT (krad)	SEL (Max) (MeV•cm²/mg)	V_{CC} (Min) (V)	V_{CC} (Max) (V)	Duty Cycle (Max) (%)	UVLO Thresholds On/Off(V)	Frequency (Max) (kHz)	Gate Drive (Typ) (A)	PWM Outputs (#)	Operating Temp. Range (°C)	Package	ECCN[2]
UC1525B-SP	5962-89511	QMLV	40	–	Bipolar	8	35	50	7/6.8	400	0.5	2	–55 to 125	CDIP, LCCC	EAR99
UC1823A-SP	5962-89905	QMLV	–	–	Bipolar	12	20	100	9.2/8.4	1000	2	1	–55 to 125	CDIP	EAR99
UC1825-DIE	–	Tested die	30	–	Bipolar	12	20	50	9.2/8.4	1000	2	2	25	Die	EAR99
UC1825-SP	5962-87681	QMLV	40	–	Bipolar	12	20	50	9.2/8.4	1000	2	2	–55 to 125	CDIP, LCCC	EAR99
UC1825A-DIE	–	Tested die	30	–	Bipolar	10	30	50	9.2/8.4	1000	2	2	25	Die	EAR99
UC1825A-SP	5962-87681	QMLV-RHA	40	30	Bipolar	10	30	50	9.2/8.4	1000	2	2	–55 to 125	CFP, CDIP, LCCC	EAR99
UC1825B-SP	5962-87681	QMLV-RHA	100	100	Bipolar	10	30	50	10.0/9.2	1000	2	2	–55 to 125	CFP, Die	EAR99
UC1842-SP	5962-86704	QMLV	–	–	Bipolar	12	28	100	16/10	500	1	1	–55 to 125	CDIP	EAR99
UC1842A-SP	5962-86704	QMLV	30	–	Bipolar	12	25	100	16/10	500	1	1	–55 to 125	CDIP	EAR99
UC1843-SP	5962-86704	QMLV	50	–	Bipolar	8.5	30	100	8.4/7.6	500	1	1	–55 to 125	CDIP, LCCC, Die	EAR99
UC1843A-DIE	–	Tested die	30	–	Bipolar	12	25	100	8.4/7.6	500	1	1	25	Die	EAR99
UC1843A-SP	5962-86704	QMLV-RHA	40	30	Bipolar	12	25	100	8.4/7.6	500	1	1	–55 to 125	CFP, CDIP, LCCC	EAR99
UC1843B-SP	5962-86704	QMLV-RHA	100	100	Bipolar	12	25	100	8.4/7.6	500	1	1	–55 to 125	CFP, Die	EAR99
UC1844-SP	5962-86704	QMLV	–	–	Bipolar	12	30	50	16/10	500	1	1	–55 to 125	LCCC	EAR99
UC1844A-SP	5962-86704	QMLV	30	–	Bipolar	12	30	50	16/10	500	1	1	–55 to 125	CDIP	EAR99
UC1845-SP	5962-86704	QMLV	–	–	Bipolar	12	30	50	8.4/7.6	500	1	1	–55 to 125	CDIP, LCCC	EAR99
UC1845A-SP	5962-86704	QMLV-RHA	45	30	Bipolar	12	25	50	8.4/7.6	500	1	1	–55 to 125	CFP, CDIP, LCCC	EAR99
UC1846-DIE	–	Tested die	–	–	Bipolar	12	40	50	7.70/6.95	500	1	1	25	Die	EAR99
UC1846-SP	5962-86806	QMLV-RHA	40	30	Bipolar	12	40	50	7.70/6.95	500	0.5	2	–55 to 125	CFP, CDIP, LCCC, Die	EAR99
UC1856-SP	5962-94530	QMLV	–	–	Bipolar	12	40	50	7.7/7.0	1000	1.5	2	–55 to 125	CFP, CDIP	EAR99
UC1863-SP	5962-92031	QMLV	–	–	Bipolar	12	22	50	8.0/7.0	500	1	2	–55 to 125	LCCC	EAR99
UC1875-SP	5962-94555	QMLV	50	–	Bipolar	10.8	18	100	10.75/11.75	1000	2	4	–55 to 125	CFP, CDIP	EAR99
UCC1806-SP	5962-94575	QMLV	–	–	Bipolar	8	14.5	50	7.5/6.75	1000	0.5	2	–55 to 125	CDIP, LCCC	EAR99

*[2] ECCN information for products that are EAR99 are shown. For up-to-date ECCN information on any product, please request from: **gtc_eccn-hts-naftateam@list.ti.com**.*

Space-Grade Power Management (Cont'd)

Low-Side Gate Drivers

Part Number[1]	Military Spec	Qualification Level	TID Char. (krad)	TID RLAT (krad)	SEL (MeV•cm²/mg)	# of Ch	Output Channel Types	Power Switch	Input V_{CC} (Min) (V)	Input V_{CC} (Max) (V)	Peak Output Current (A)	Rise Time (ns)	Fall Time (ns)	Prop Delay (ns)	Package Group	ECCN[2]
UC1705-SP	5962-95798	QMLV	–	–	Bipolar	1	Single low-side	MOSFET, IGBT	5	40	1.5	40	40	100	CDIP	EAR99
UC1707-SP	5962-87619	QMLV	50	–	Bipolar	2	Single low-side	MOSFET, IGBT	5	40	1.5	40	40	100	CFP, LCCC, CDIP	EAR99
UC1708-SP	5962-00514	QMLV	–	–	Bipolar	2	Dual low-side	MOSFET, IGBT	5	35	3	25	25	25	LCCC, CDIP	EAR99
UC1709-SP	5962-01512	QMLV	–	–	Bipolar	2	Dual low-side	MOSFET, IGBT	5	40	1.5	40	40	25	CDIP	EAR99
UC1710-SP	5962-01520	QMLV	–	–	Bipolar	1	Single low-side	MOSFET, IGBT	5	18	6	25	20	35	CDIP	EAR99
UC1715-SP	5962-00521	QMLV	50	–	Bipolar	2	Low-side, Aux low-side	MOSFET	7	20	2	30	25	50	CFP	EAR99

Isolated Feedback Generator

Part Number[1]	Military Spec	Qualification Level	TID Char. (Max) (krad)	TID RLAT (krad)	SEL (Max) (MeV•cm²mg)	V_{IN} Range (V)	Ref. Voltage	Ref. Tolerance (%)	Package	ECCN[2]
UC1901-SP	5962-89441	QMLV	–	–	Bipolar	4.5 to 40	1.5	1	CDIP	EAR99

Precision Analog Controller

Part Number[1]	Military Spec	Qualification Level	TID Char. (Max) (krad)	TID RLAT (krad)	SEL (Max) (MeV•cm²mg)	I_{drive} (Max) (mA)	V_{OUT} (min) (V)	V_{OUT} (max) (V)	Package	ECCN[2]
UC19432-SP	5962-09233	QMLV	30	–	Bipolar	100	2	40	CDIP, LCCC	EAR99

Schottky Diode Array

Part Number[1]	Military Spec	Qualification Level	TID Char. (Max) (krad)	TID RLAT (krad)	SEL (Max) (MeV•cm²mg)	# of Ch	V_F (typ) (mV)	Leakage Current (typ) (mA)	Package	ECCN[2]
UC1611-SP	5962-90538	QMLV	–	–	Bipolar	4	400	0.01	CDIP, LCCC	EAR99

Space-Grade Embedded Processing + Memory

Mixed-Signal Microcontroller (MCU) – MSP430™

Part Number[2]	Military Spec	Qualification Level	TID Char. (Max) (krad)	TID RLAT (krad)	SEL (Max) (MeV•cm²/mg)	ADC	FRAM (KB)	I²C (#)	SPI (#)	UART (#)	Comparators (# of Ch)	Operating Temp. Range (°C)	Package	ECCN[2]
MSP430FR5969-SP	–	TI Space-Grade Plastic	75	50	72	12-bit SAR	64	1	3	2	16	–55 to 105	QFP, QFN	EAR99

Digital Signal Processors (DSPs)

Part Number[1]	Military Spec	Qualification Level	TID Char. Max. (krad)	TID RLAT (krad)	SEL (Max) (MeV•cm²/mg)	GFLOPS	Core Supply (V)	I/O Supply (V)	Package
SMJ320C6701-SP	5962-98661	QMLV	100	–	117	1	1.9	3.3	CBGA, CLGA
SMV320C6727B-SP	–	TI Space Grade	150	100	100	1.5	1.2	3.3	CQFP

SRAM Memory

Part Number[1]	Military Spec	Qualification Level	TID Char. (Max) (krad)	TID RLAT (krad)	SEL (Max) (MeV•cm²/mg)	Memory (Mb)	Read Time (ns)	Write Time (ns)	Error Mitigation	Package
SMV512K32-SP	5962-11237	QMLV	300	–	110	16	20	13.8	Built-In EDAC	CFP

[1] All device operating temperatures are –55 to 125°C.
*[2] ECCN information for products that are EAR99 are shown. For up-to-date ECCN information on any product, please request from: **gtc_eccn-hts-naftateam@list.ti.com**.*

Space-Grade Logic

Logic

Generic Part Number	Military Spec	Qualification	TID Char. (krad)	TID RLAT (krad)	SEL (Max) (MeV•cm²/mg)	Sub-Family (Part Type)	Family	# of Ch	V_{CC} Range (V)	Package	Operating Temp. (°C)	ECCN[1]
SN54AC00-SP	5962-87549	QMLV-RHA	100	100	86	NAND gate	AC	4	2 to 6	CDIP, CFP, Die	–55 to 125	EAR99†
SN54HC00-DIE	–	Tested die	–	–	–	NAND gate	HC	4	2 to 6	Die	25	EAR99
SN54HC00-SP	5962-84037	QMLV	–	–	–	NAND gate	HC	4	2 to 6	CDIP, CFP	–55 to 125	EAR99
SN54HC10-SP	5962-84038	QMLV	–	–	–	NAND gate	HC	3	2 to 6	CDIP	–55 to 125	EAR99
SN54HC132-SP	5962-89845	QMLV	–	–	–	NAND gate	HC	4	2 to 6	CDIP, CFP	–55 to 125	EAR99
SN54HC20-SP	5962-84039	QMLV	–	–	–	NAND gate	HC	2	2 to 6	CDIP	–55 to 125	EAR99
SN54LS00-SP	M38510/300	JANS	–	–	Bipolar	NAND gate	LS	4	4.5 to 5.5	CDIP, CFP	–55 to 125	EAR99
SN54LS10-SP	M38510/300	JANS	–	–	Bipolar	NAND gate	LS	3	4.5 to 5.5	CFP	–55 to 125	EAR99
SN54LS26-SP	5962-76020	QMLV	–	–	Bipolar	NAND gate	LS	4	4.5 to 5.5	CFP	–55 to 125	EAR99
SN54LVC00A-SP	5962-97533	QMLV	–	–	–	NAND gate	LVC	4	2 to 6	CFP	–55 to 125	EAR99
SN54AC02-DIE	–	Tested die	50	–	–	NOR gate	AC	4	2 to 6	Die	25	EAR99
SN54AC02-SP	5962-87612	QMLV	50	–	–	NOR gate	AC	4	2 to 6	CDIP, CFP	–55 to 125	EAR99
SN54HC02-SP	5962-84041	QMLV	–	–	–	NOR gate	HC	4	2 to 6	CDIP	–55 to 125	EAR99
SN54LS02-SP	M38510/303	JANS	–	–	Bipolar	NOR gate	LS	4	4.5 to 5.5	CFP	–55 to 125	EAR99
SN54AHCT08-SP	5962-96821	QMLV	–	–	–	AND gate	AHCT	4	4.5 to 5.5	CFP	–55 to 125	EAR99
SN54HC08-DIE	–	Tested die	–	–	–	AND gate	HC	4	2 to 6	Die	25	EAR99
SN54HC08-SP	5962-84047	QMLV	–	–	–	AND gate	HC	4	2 to 6	CDIP, CFP	–55 to 125	EAR99
SN54HC11-SP	5962-84048	QMLV	–	–	–	AND gate	HC	3	2 to 6	CDIP	–55 to 125	EAR99
SN54LS08-SP	M38510/310	JANS	–	–	Bipolar	AND gate	LS	4	4.5 to 5.5	CDIP, CFP	–55 to 125	EAR99
SN54HC32-SP	5962-84045	QMLV	–	–	–	OR gate	HC	4	2 to 6	CDIP, CFP	–55 to 125	EAR99
SN54LS32-SP	M38510/305	JANS	–	–	Bipolar	OR gate	LS	4	4.5 to 5.5	CDIP, CFP	–55 to 125	EAR99
SN54AC14-SP	5962-87624	QMLV	50	–	–	Inverting buffer	AC	6	2 to 6	CDIP, CFP	–55 to 125	EAR99
SN54ACT04-SP	5962-89734	QMLV	–	–	–	Inverting buffer	ACT	6	4.5 to 5.5	CDIP, CFP	–55 to 125	EAR99
SN54AHCT14-SP	5962-96801	QMLV	–	–	–	Inverting buffer	AHCT	6	4.5 to 5.5	CDIP, CFP	–55 to 125	EAR99
SN54HC04-SP	5962-84098	QMLV	–	–	–	Inverting buffer	HC	6	2 to 6	CDIP, CFP	–55 to 125	EAR99
SN54HC14-SP	5962-84091	QMLV	–	–	–	Inverting buffer	HC	6	2 to 6	CDIP, CFP	–55 to 125	EAR99
SN54HCT04-SP	5962-89747	QMLV	–	–	–	Inverting buffer	HCT	6	4.5 to 5.5	CDIP, CFP	–55 to 125	EAR99
SN54LS04-SP	M38510/300	JANS	–	–	Bipolar	Inverting buffer	LS	6	4.5 to 5.5	CDIP	–55 to 125	EAR99
SN54LS14-SP	5962-96658	QMLV	–	–	Bipolar	Inverting buffer	LS	6	4.5 to 5.5	CFP	–55 to 125	EAR99
SN54LS240-SP	5962-78012	QMLV	–	–	Bipolar	Inverting buffer	LS	8	4.5 to 5.5	CFP	–55 to 125	EAR99
SN54LVC14A-SP	5962-97615	QMLV	–	–	–	Inverting buffer	LVC	6	2 to 3.6	CDIP, CFP, LCCC	–55 to 125	EAR99
SN54AC244-SP	5962-87552	QMLV	–	–	–	Non-inverting buffer	AC	8	2 to 6	CDIP, CFP	–55 to 125	EAR99
SN54ACT244-SP	5962-87760	QMLV	–	–	–	Non-inverting buffer	ACT	8	4.5 to 5.5	CDIP, CFP	–55 to 125	EAR99
SN54AHC244-SP	5962-96782	QMLV	–	–	–	Non-inverting buffer	AHC	8	2 to 5.5	CDIP, CFP	–55 to 125	EAR99
SN54ALS244C-SP	5962-86839	QMLV	–	–	Bipolar	Non-inverting buffer	ALS	8	4.5 to 5.5	CDIP, CFP	–55 to 125	EAR99
SN54HC244-SP	5962-84096	QMLV	–	–	–	Non-inverting buffer	HC	8	2 to 6	CDIP, CFP	–55 to 125	EAR99
SN54HCT244-SP	5962-85130	QMLV	–	–	–	Non-inverting buffer	HCT	8	4.5 to 5.5	CDIP, CFP	–55 to 125	EAR99
SN54LS244-SP	M38510/324	JANS	–	–	Bipolar	Non-inverting buffer	LS	8	4.5 to 5.5	CDIP, CFP	–55 to 125	EAR99
SN54LVCH244A-SP	5962-97542	QMLV	–	–	–	Non-inverting buffer	LVC	8	2 to 3.6	CFP, LCCC	–55 to 125	EAR99
SN54LVTH162244-SP	5962-96809	QMLV	–	–	–	Non-inverting buffer	LVT	16	2.7 to 3.6	CFP	–55 to 125	EAR99
SN54LVTH16244A-SP	5962-96685	QMLV	–	–	–	Non-inverting buffer	LVT	16	2.7 to 3.6	CFP	–55 to 125	EAR99
SN54LVTH244A-SP	5962-95844	QMLV	–	–	–	Non-inverting buffer	LVT	8	2.7 to 3.6	CDIP, CFP, LCCC	–55 to 125	EAR99
SN54AC74-SP	5962-88520	QMLV	–	–	–	D-type flip-flop	AC	2	2 to 6	CFP	–55 to 125	EAR99
SN54ACT374-SP	5962-87631	QMLV	–	–	–	D-type flip-flop	ACT	8	4.5 to 5.5	CFP	–55 to 125	EAR99
SN54HC273-DIE	–	Tested die	–	–	–	D-type flip-flop	HC	8	2 to 6	Die	25	EAR99
SN54HC273-SP	5962-84099	QMLV	–	–	–	D-type flip-flop	HC	8	2 to 6	CDIP, CFP	–55 to 125	EAR99

*[1] ECCN information for products that are EAR99 are shown. For up-to-date ECCN information on any product, please request from: **gtc_eccn-hts-naftateam@list.ti.com**.*

† EAR99 only pertains to certain device variants, including the following Flight Model devices: 5962-8754903VCA and 5962-8754903VDA.

***Note:** TI HiRel started releasing QMLV devices in 2001, at that time several logic devices were released as QMLV, however, TI did not perform any radiation testing on these early releases—as such, although third-party data might be available, most of these TI QMLV logic devices do not have radiation data available. In the tables above, radiation performance data is only included for devices where TI has performed radiation testing.*

Space-Grade Logic (Cont'd)

Logic (cont'd)

Generic Part Number	Military Spec	Qualification	TID Char. (krad)	TID RLAT (krad)	SEL (Max) (MeV•cm²/mg)	Sub-Family (Part Type)	Family	# of Ch	V_{CC} Range (V)	Package	Operating Temp. (°C)	ECCN[1]
SN54HC374-SP	5962-84071	QMLV	–	–	–	D-type flip-flop	HC	8	2 to 6	CDIP, CFP	–55 to 125	EAR99
SN54HC74-SP	5962-84056	QMLV	–	–	–	D-type flip-flop	HC	2	2 to 6	CDIP, CFP	–55 to 125	EAR99
SN54LS273-SP	5962-78010	QMLV	–	–	Bipolar	D-type flip-flop	LS	8	4.5 to 5.5	CDIP	–55 to 125	EAR99
SN54LS74A-SP	M38510/301	JANS	–	–	Bipolar	D-type flip-flop	LS	2	4.5 to 5.5	CDIP, CFP	–55 to 125	EAR99
SN54LVC74A-SP	5962-97616	QMLV	–	–	–	D-type flip-flop	LVC	2	2 to 3.6	CFP	–55 to 125	EAR99
SN54LVTH162374-SP	5962-98542	QMLV	–	–	–	D-type flip-flop	LVT	16	2.7 to 3.6	CFP	–55 to 125	EAR99
SN54LVTH574-SP	5962-95832	QMLV	–	–	–	D-type flip-flop	LVT	8	2.7 to 3.6	CFP	–55 to 125	EAR99
SN54HC109-SP	5962-84150	QMLV	–	–	–	J-K flip-flop	HC	2	2 to 6	CFP	–55 to 125	EAR99
SN54AC373-SP	5962-87555	QMLV	–	–	–	D-type latch	AC	8	2 to 6	CFP	–55 to 125	EAR99
SN54ACT373-SP	5962-87556	QMLV	–	–	–	D-type latch	ACT	8	4.5 to 5.5	CDIP	–55 to 125	EAR99
SN54HC373-DIE	–	Tested die	–	–	–	D-type latch	HC	8	2 to 6	Die	25	EAR99
SN54HC373-SP	5962-84072	QMLV	–	–	–	D-type latch	HC	8	2 to 6	CDIP, CFP	–55 to 125	EAR99
SN54HC573A-SP	5962-85128	QMLV	–	–	–	D-type latch	HC	8	2 to 6	CDIP	–55 to 125	EAR99
SN54HCT373-SP	5962-86867	QMLV	–	–	–	D-type latch	HCT	8	4.5 to 5.5	CFP	–55 to 125	EAR99
SN54LS373-SP	M38510/325	JANS	–	–	Bipolar	D-type latch	LS	8	4.75 to 5.25	CDIP, CFP	–55 to 125	EAR99
SN54LVTH162373-SP	5962-97638	QMLV	–	–	–	D-type latch	LVT	16	2.7 to 3.6	CFP	–55 to 125	EAR99
SN54HC161-SP	5962-84075	QMLV	–	–	–	Counter	HC	–	2 to 6	CDIP	–55 to 125	EAR99
SN54LS161A-SP	5962-76008	QMLV	–	–	Bipolar	Counter	LS	–	4.75 to 5.25	CDIP	–55 to 125	EAR99
SN54LS193-SP	M38510/315	JANS	–	–	Bipolar	Counter	LS	–	4.75 to 5.25	CFP	–55 to 125	EAR99
SN54LS393-SP	M38510/327	JANS	–	–	Bipolar	Counter	LS	–	4.75 to 5.25	CFP	–55 to 125	EAR99
SN54LS283-SP	5962-76043	QMLV	–	–	Bipolar	Adder	LS	–	4.75 to 5.25	CDIP	–55 to 125	EAR99
SN54HC138-SP	5962-84062	QMLV	–	–	–	Encoders & decoders	HC	1	2 to 6	CDIP, CFP	–55 to 125	EAR99
SN54HC139-SP	5962-84092	QMLV	–	–	–	Encoders & decoders	HC	2	2 to 6	CFP	–55 to 125	EAR99
SN54HC153-SP	5962-84093	QMLV	–	–	–	Encoders & decoders	HC	2	2 to 6	CDIP, CFP	–55 to 125	EAR99
SN54HC157-SP	5962-86061	QMLV	–	–	–	Encoders & decoders	HC	4	2 to 6	CDIP	–55 to 125	EAR99
SN54LS138-SP	M38510/307	JANS	–	–	Bipolar	Encoders & decoders	LS	1	4.5 to 5.5	CDIP, CFP	–55 to 125	EAR99
SN54LS139A-SP	M38510/307	JANS	–	–	Bipolar	Encoders & decoders	LS	2	4.5 to 5.5	CDIP, CFP	–55 to 125	EAR99
SN54LS145-SP	5962-85084	QMLV	–	–	Bipolar	Encoders & decoders	LS	1	4.5 to 5.5	CDIP	–55 to 125	EAR99
SN54LVC138A-SP	5962-97526	QMLV	–	–	–	Encoders & decoders	LVC	1	2 to 3.6	CFP	–55 to 125	EAR99
SN54LS123-SP	5962-76039	QMLV	–	–	Bipolar	Monostable multivibrator	LS	2	4.75 to 5.25	CDIP, CFP	–55 to 125	EAR99
SN54LVC646A-SP	5962-97626	QMLV	50	–	–	Registered transceiver	LVC	–	2 to 3.6	CFP	–55 to 125	EAR99
SN54HC164-SP	5962-84162	QMLV	–	–	–	Shift register	HC	8	2 to 6	CDIP, CFP	–55 to 125	EAR99
SN54HC166-SP	5962-90501	QMLV	–	–	–	Shift register	HC	8	2 to 6	CDIP	–55 to 125	EAR99
SN54HC595-SP	5962-86816	QMLV	–	–	–	Shift register	HC	8	2 to 6	CDIP, CFP	–55 to 125	EAR99
SN54LS164-SP	M38510/306	JANS	–	–	Bipolar	Shift register	LS	8	4.75 to 5.25	CDIP, CFP	–55 to 125	EAR99
SN54LS165A-SP	5962-77006	QMLV	–	–	Bipolar	Shift register	LS	8	4.75 to 5.25	CDIP, CFP	–55 to 125	EAR99
SN54AC245-SP	5962-87758	QMLV	–	–	–	Standard transceiver	AC	–	2 to 6	CFP	–55 to 125	EAR99
SN54ACT245-SP	5962-87663	QMLV	–	–	–	Standard transceiver	ACT	–	4.5 to 5.5	CDIP, CFP	–55 to 125	EAR99
SN54AHC245-SP	5962-96818	QMLV	–	–	–	Standard transceiver	AHC	–	2 to 5.5	CFP	–55 to 125	EAR99
SN54HC245-SP	5962-84085	QMLV	–	–	–	Standard transceiver	HC	–	2 to 6	CDIP, CFP	–55 to 125	EAR99
SN54HCT245-SP	5962-85506	QMLV	–	–	-	Standard transceiver	HCT	–	4.5 to 5.5	CDIP, CFP	–55 to 125	EAR99
SN54LS245-SP	5962-80021	QMLV	–	–	Bipolar	Standard transceiver	LS	–	4.5 to 5.5	CFP	–55 to 125	EAR99
SN54LVCH245A-SP	5962-97543	QMLV	–	–	–	Standard transceiver	LVC	–	2 to 3.6	CDIP, CFP, LCCC	–55 to 125	EAR99
SN54LVTH162245-SP	5962-96780	QMLV	–	–	–	Standard transceiver	LVT	–	2.7 to 3.6	CFP	–55 to 125	EAR99
SN54LVTH16245A-SP	5962-96686	QMLV	–	–	–	Standard transceiver	LVT	–	2.7 to 3.6	CFP	–55 to 125	EAR99
SN54LVTH245A-SP	5962-95642	QMLV	–	–	–	Standard transceiver	LVT	–	2.7 to 3.6	CDIP, CFP, LCCC	–55 to 125	EAR99

[1] *ECCN information for products that are EAR99 are shown. For up-to-date ECCN information on any product, please request from:* ***gtc_eccn-hts-naftateam@list.ti.com****.*

Note: *TI HiRel started releasing QMLV devices in 2001, at that time several logic devices were released as QMLV, however, TI did not perform any radiation testing on these early releases—as such, although third-party data might be available, most of these TI QMLV logic devices do not have radiation data available. In the tables above, radiation performance data is only included for devices where TI has performed radiation testing.*

Space Enhanced Plastic (Space EP)

Radiation Tolerant Portfolio Overview

In addition to the large QMLV selection, TI has begun to offer a leading-edge portfolio of plastic devices for Low Earth Orbit (LEO) missions with short mission life, and requirements for small size. This encompasses the emerging term, "New Space", loosely defined as covering some of the trends in the space community, including the emerging private spaceflight industry and programs that have reduced reliability, lifetime and radiation requirements. There are unique challenges with the space environment such as radiation requirements, thermal cycling and outgassing. TI has addressed this with a new line of rigorously developed products, Space-Enhanced Plastics (SEP).

Space-EP devices offer the following advantages over standard catalog products:

- Controlled baseline with one wafer fab, one assembly site, one material set.
- Optimized material set with die attach, mold compound, leadframe and bond wire all selected to maximize reliability.
- No high tin (>97% Sn) construction including terminations (SnAgCu solderballs and Matte-Sn plating) or internal package components (die bumps or substrate plating).
- No copper bond wire. Product is either flipchip mounted (no bond wire) or uses gold bond wire.
- Additional assembly processing including 100% temperature cycle or 100% single-pass reflow simulation in lieu of temperature cycle.
- Characterization over target temperature range (–55°C to +125°C).
- Parametric testing is standard at both room and high temperatures with guardbands to assure datasheet limits at cold temperature.
- Assembly lot acceptance including x-ray sampling and CSAM sampling.
- Wafer lot acceptance using MIL-PRF-38535 QML Class V as baseline.
- Radiation Lot Acceptance Testing (Group E) to 20krad TID for each wafer lot per MIL-STD-883.
- One time characterization testing to 30-krad TID per MIL-STD-883.
- SEL characterization to 43 MeV-cm^2/mg.
- Outgassing qualification for each product per ASTM E-595.
- Qualification to SMC-SO-11.

Space applications require known radiation performance. Not only are TI Space-EP products characterized for total dose and single event radiation performance, but in many cases different wafer fabrication processes or alternate die designs are used to achieve specified levels of radiation tolerance. This is further ensured with a radiation lot acceptance test (RLAT or Group E) performed on each Space-EP wafer lot. An OEM may be tempted to characterize one lot of product and then assume that subsequent material will perform the same. This is not always true. Depending on the process technology, some devices exhibit a significant wafer lot to wafer lot variation and, in some cases, a wafer to wafer variation. Since traceability of Commerical Off The Shelf (COTS) material is only to the wafer lot level, it creates a substantial risk to the OEM.

Texas Instruments Space-EP provides a very cost effective means of mitigating the risks associated with using commercial off-the shelf plastic encapsulated microcircuits. TI's approach, combining the best of the Enhanced Product methodology and Class V-like wafer processing, ensures a product that meets published specifications in critical space and launch vehicle applications, while providing small size and reduced system cost.

TI is currently offering five SEP devices, and is planning to offer many more in a variety of functions.

- **TLV1704-SEP**—2.2-V to 36-V, radiation hardened microPower quad comparator in space-enhanced plastic
- **INA240-SEP**—80-V, low-/high-side, zero-drift, current sense amp with enhanced PWM rejection in space-enhanced plastic
- **TL7700-SEP**—Voltage supervisor in space-enhanced plastic
- **TPS73801-SEP**—Radiation-hardened 1-A low-noise fast-transient-response LDO in space-enhanced plastic
- **SN55HVD233-SEP**—Radiation-hardened 3.3-V CAN transceiver in space-enhanced plastic package with standby mode

For more information on the device roadmap and offerings, please contact your TI representative, or reach out to TI through the E2E™ community or **ti.com/sep**.

Space Enhanced Plastics Parts List

Space-Enhanced Plastic Products

Generic Part Number	Description	Orderable Material	Subfamily	Pin	PKG	PKG Group	ECCN[1]
INA240-SEP	80-V, low-/high-side, zero-drift, current sense amp w/ enhanced PWM rejection in space-enhanced plastic package	INA240PMPWPSEP	Current sense amplifiers	8	PW	TSSOP	EAR99
		INA240PMPWTPSEP		8	PW	TSSOP	EAR99
		V62/18615-01XE		8	PW	TSSOP	EAR99
		V62/18615-01XE-T		8	PW	TSSOP	EAR99
SN55HVD233-SEP	3.3-V CAN transceiver in space-enhanced plastic package with standby mode	SN55HVD233MDPSEP	CAN	8	D	SOIC	EAR99
		SN55HVD233MDTPSEP		8	D	SOIC	EAR99
		V62/18617-01XE		8	D	SOIC	EAR99
		V62/18617-01XE-T		8	D	SOIC	EAR99
SN65C1168E-SEP	Dual differential drivers and receivers with ± 8-kV IEC ESD protection in space-enhanced plastic	SN65C1168EMPWSEP	RS-485/RS-422	16	PW	TSSOP	EAR99
		SN65C1168EMPWTSEP		16	PW	TSSOP	EAR99
TL7700-SEP	Supply-voltage supervisor in space-enhanced plastic package	TL7700CMPWPSEP	Supervisor IC	8	PW	TSSOP	EAR99
		TL7700CMPWTPSEP		8	PW	TSSOP	EAR99
		V62/19602-01XE		8	PW	TSSOP	EAR99
		V62/19602-01XE-T		8	PW	TSSOP	EAR99
TLV1704-SEP	2.2-V to 36-V, microPower quad comparator in space-enhanced plastic package	TLV1704AMPWPSEP	Comparator	14	PW	TSSOP	EAR99
		TLV1704AMPWTPSEP		14	PW	TSSOP	EAR99
		V62/18613-01XE		14	PW	TSSOP	EAR99
		V62/18613-01XE-T		14	PW	TSSOP	EAR99
TPS73801-SEP	1-A low-noise fast-transient-response LDO in space-enhanced plastic package	TPS73801MDCQPSEP	Linear regulators (LDO)	6	DCQ	SOT-223	EAR99
		TPS73801MDCQTPSEP		6	DCQ	SOT-223	EAR99
		V62/18616-01XE		6	DCQ	SOT-223	EAR99
		V62/18616-01XE-T		6	DCQ	SOT-223	EAR99
TPS7H4010-SEP	3.5-V to 32-V_{IN}, 6-A step-down DC/DC converter in space-enhanced plastic	TPS7H4010MRNPTSEP	Buck converters (integrated switch)	30	RNP	WQFN	EAR99
		TPS7H4010MRNPSEP		30	RNP	WQFN	EAR99
		V62/19623-01XE		30	RNP	WQFN	EAR99
		V62/19623-01XE-T		30	RNP	WQFN	EAR99

*1) ECCN information for products that are EAR99 are shown. For up-to-date ECCN information on any product, please request from: **gtc_eccn-hts-naftateam@list.ti.com**.*

For the most up-to-date list of Radiation Tolerant products for NewSpace applications, visit ti.com/SpaceEP

Minimum Orderable Quantity (MOQ) is one (1) when ordering through the TI Store. Check product folder for availability.

TI Product Classifications and Qualifications

	Commercial	Automotive AEC-Q100	Enhanced Product (EP)	QMLQ	Space EP	Space QMLV	Space QMLV-RHA
Packaging	Plastic	Plastic	Plastic	Ceramic	Plastic	Ceramic	Ceramic
Military Spec	No	No	Yes – VID	Yes – SMD	Yes – VID	Yes – SMD	Yes – SMD
Single controlled baseline	No	No	Yes	Yes	Yes	Yes	Yes
Multiple wafer lots per reel possible	Yes	Yes	Yes	No	No	No	No
Bond wires	Au/Cu	Au/Cu	Au	Al	Au	Al	Al
Can pure Tin (Sn) be used?	Yes	Yes	No	No	No	No	No
Production burn-in	No	No	No	Yes	No	Yes	Yes
Radiation: TID characterization	No	No	No	No	Yes 30 to 50 krad(Si)	Yes 50 to 300 krad(Si)	Yes 50 to 300 krad(Si)
Radiation: TID Radiation Lot Acceptance Testing (RLAT) – RHA	No	No	No	No	Yes 20, 30 or 50 krad(Si)	No	Yes 50, 100 or 300 krad(Si)
Radiation: SEL immunity	No	No	No	No	Yes (≥ 43 MeV•cm^2/mg)	Yes (≥ 60 MeV•cm^2/mg)	Yes (≥ 60 MeV•cm^2/mg)
Typical temperature range	–40–85°C	–40–125°C	–55–125°C	–55–125°C	–55–125°C	–55–125°C	–55–125°C
Outgassing tested per ASTM E595	No	No	No	N/A	Yes	N/A	N/A
Extra qualification and process monitors	None	X-ray and reflow, outlier control	Extended HAST, X-ray and reflow, outlier	MIL-PRF-38535 Group A, B, C, D	MIL-PRF-38535 "like" A, D, E	MIL-PRF-38535 Group A, B, C, D	MIL-PRF-38535 Group A, B, C, D, E
Life test per wafer lot	No	No	No	No	No	No	Yes
Description	Tailored for high-volume commercial applications and flexible supply.	High reliability for automotive applications with flexible supply. Packages can use matte Sn and Cu bond wires.	Controlled baseline ensures more homogenous performance across lots. No Sn or Cu bond wire permitted. Uses increased reliability material sethomogeneous performance across lots. No Sn or Cu bond wire permitted. Uses increased reliability material set.	Ceramic military grade parts released to a MIL spec. Intended for extreme environments and long term dormant storage.	Space grade parts meant for low orbit missions. Screening for TID (Radiation Assured) High-reliability material set, similar to EP.	Space grade parts release to a MIL spec. Meant for long lifetime, high-reliability missions.	Same as QMLV but additional lot testing and screening for TID (Radiation Assured).

TI Worldwide Technical Support

TI Support

Thank you for your business. Find the answer to your support need or get in touch with our support center at

www.ti.com/support

China:
http://www.ti.com.cn/guidedsupport/cn/docs/supporthome.tsp

Japan:
http://www.tij.co.jp/guidedsupport/jp/docs/supporthome.tsp

Technical support forums

Search through millions of technical questions and answers at TI's E2E™ Community (engineer-to-engineer) at

e2e.ti.com

China:
http://www.deyisupport.com/

Japan:
http://e2e.ti.com/group/jp/

TI Training

From technology fundamentals to advanced implementation, we offer on-demand and live training to help bring your next-generation designs to life. Get started now at

training.ti.com

China:
http://www.ti.com.cn/general/cn/docs/gencontent.tsp?contentId=71968

Japan:
https://training.ti.com/jp

Important Notice: The products and services of Texas Instruments Incorporated and its subsidiaries described herein are sold subject to TI's standard terms and conditions of sale. Customers are advised to obtain the most current and complete information about TI products and services before placing orders. TI assumes no liability for applications assistance, customer's applications or product designs, software performance, or infringement of patents. The publication of information regarding any other company's products or services does not constitute TI's approval, warranty or endorsement thereof.

B011617

The platform bar, E2E and MSP430 are trademarks and WEBENCH is a registered trademark of Texas Instruments. All other trademarks are the property of their respective owners.

IMPORTANT NOTICE AND DISCLAIMER

TI PROVIDES TECHNICAL AND RELIABILITY DATA (INCLUDING DATASHEETS), DESIGN RESOURCES (INCLUDING REFERENCE DESIGNS), APPLICATION OR OTHER DESIGN ADVICE, WEB TOOLS, SAFETY INFORMATION, AND OTHER RESOURCES “AS IS” AND WITH ALL FAULTS, AND DISCLAIMS ALL WARRANTIES, EXPRESS AND IMPLIED, INCLUDING WITHOUT LIMITATION ANY IMPLIED WARRANTIES OF MERCHANTABILITY, FITNESS FOR A PARTICULAR PURPOSE OR NON-INFRINGEMENT OF THIRD PARTY INTELLECTUAL PROPERTY RIGHTS.

These resources are intended for skilled developers designing with TI products. You are solely responsible for (1) selecting the appropriate TI products for your application, (2) designing, validating and testing your application, and (3) ensuring your application meets applicable standards, and any other safety, security, or other requirements. These resources are subject to change without notice. TI grants you permission to use these resources only for development of an application that uses the TI products described in the resource. Other reproduction and display of these resources is prohibited. No license is granted to any other TI intellectual property right or to any third party intellectual property right. TI disclaims responsibility for, and you will fully indemnify TI and its representatives against, any claims, damages, costs, losses, and liabilities arising out of your use of these resources.

TI’s products are provided subject to TI’s Terms of Sale (https:www.ti.com/legal/termsofsale.html) or other applicable terms available either on ti.com or provided in conjunction with such TI products. TI’s provision of these resources does not expand or otherwise alter TI’s applicable warranties or warranty disclaimers for TI products.

Mailing Address: Texas Instruments, Post Office Box 655303, Dallas, Texas 75265
Copyright © 2021, Texas Instruments Incorporated